OPERATING AND SERVICE MANUAL

WAVE ANALYZER
310A

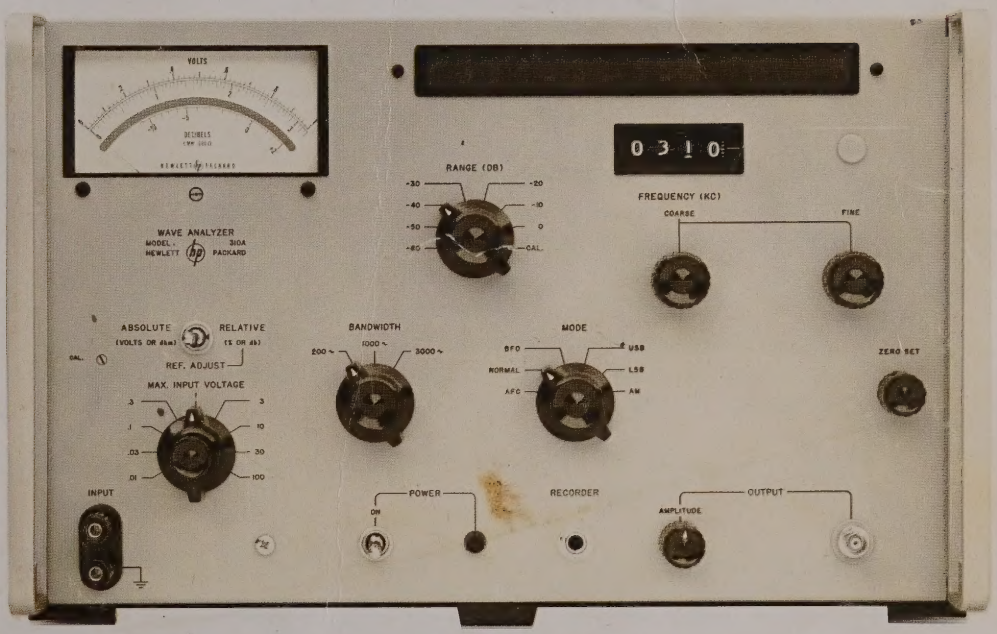

HEWLETT hp PACKARD

HP 310A

HEWLETT hp PACKARD

CERTIFICATION

Hewlett-Packard Company certifies that this instrument met its published specifications at the time of shipment from the factory. Hewlett-Packard Company further certifies that its calibration measurements are traceable to the United States National Bureau of Standards, to the extent allowed by the Bureau's calibration facility, and to the calibration facilities of other International Standards Organization members.

WARRANTY AND ASSISTANCE

This Hewlett-Packard product is warranted against defects in materials and workmanship for a period of one year from the date of shipment, except that in the case of certain components, if any, listed in Section I of this operating manual, the warranty shall be for the specified period. Hewlett-Packard will, at its option, repair or replace products which prove to be defective during the warranty period provided they are returned to Hewlett-Packard, and provided the proper preventive maintenance procedures as listed in this manual are followed. Repairs necessitated by misuse of the product are not covered by this warranty. NO OTHER WARRANTIES ARE EXPRESSED OR IMPLIED, INCLUDING BUT NOT LIMITED TO THE IMPLIED WARRANTIES OF MERCHANTABILITY AND FITNESS FOR A PARTICULAR PURPOSE. HEWLETT-PACKARD IS NOT LIABLE FOR CONSEQUENTIAL DAMAGES.

If this product is sold as part of a Hewlett-Packard integrated instrument system, the above warranty shall not be applicable, and this product shall be covered only by the system warranty.

Service contracts or customer assistance agreements are available for Hewlett-Packard products.

For any assistance, contact your nearest Hewlett-Packard Sales and Service Office. Addresses are provided at the back of this manual.

OPERATING AND SERVICE MANUAL

MODEL 310A
WAVE ANALYZER

Serial Number 1507A03680 and greater

IMPORTANT NOTICE

Any changes made in instruments with serial numbers greater than those stated on this title page will be noted on a change sheet supplied with this manual. If the serial number of your instrument is lower than that stated above, the manual can contain revisions that do not apply to your instrument. Backdating information located in Appendix I adapts this manual to these instruments.

WARNING

To help minimize the possibility of electrical fire or shock hazards, do not expose this instrument to rain or excess moisture.

-hp- Part No. 00310-90003

Microfiche Part No. 00310-90053

Copyright Hewlett-Packard Company 1964
P.O. Box 301, Loveland, Colorado, 80537 U.S.A.

Printed: February 1976

TABLE OF CONTENTS

Section		Page
I.	GENERAL INFORMATION	1-1
	1-1. Introduction	1-1
	1-2. Description	1-1
	1-4. Distortion Measurements	1-1
	1-6. Absolute Measurements	1-1
	1-8. Response Measurements	1-1
	1-10. Automatic Frequency Control	1-1
	1-12. Restored Frequency Output	1-1
	1-14. Receiver Functions	1-1
	1-16. Applications	1-1
	1-18. Instrument Identification	1-2
	1-20. Accessory Sweep Drive	1-2
	1-22. Options	1-2
	1-23. Option 01 Crystal Calibrator	1-2
	1-25. Option 02 Special Meter	1-2
	1-27. Warranty	1-2
II.	INSTALLATION	2-1
	2-1. Incoming Inspection	2-1
	2-2. Mechanical Inspection	2-1
	2-4. Electrical Inspection	2-1
	2-6. Installation	2-1
	2-8. Power Requirement	2-2
	2-10. Safety Power Cord	2-2
	2-12. Repackaging for Shipment	2-2
III.	OPERATING INSTRUCTIONS	3-1
	3-1. General	3-1
	3-3. Front Panel Controls	3-1
	3-4. Frequency	3-1
	3-6. Sensitivity	3-1
	3-8. Function	3-1
	3-10. Bandwidth	3-1
	3-12. Operating Procedure	3-1
	3-13. General	3-1
	3-15. Input Overloading	3-1
IV.	CIRCUIT DESCRIPTION	4-1
	4-1. General	4-1
	4-4. Block Diagram	4-1
	4-10. Circuit Details	4-1
	4-11. Input Attenuator	4-1
	4-13. Input Amplifier	4-1
	4-15. Input Mixer	4-1
	4-18. Local Oscillator	4-2
	4-21. Active Low-Pass Filter	4-2
	4-27. AFC Circuit	4-3
	4-35. AFC Disabling Circuit	4-5
	4-37. Meter Amplifier	4-5
	4-39. BFO	4-5
	4-41. Output Mixer	4-5
	4-43. Power Supplies	4-7
	4-46. Indicator Circuit	4-7
V.	MAINTENANCE	5-1
	5-1. Introduction	5-1
	5-3. Test Equipment	5-1
	5-5. Performance Checks	5-1
	5-7. General Check	5-1
	5-8. Selectivity Check	5-1
	5-9. BFO and Frequency Check	5-1
	5-10. AFC Discriminator Check	5-2
	5-11. Voltage Accuracy Check	5-2
	5-12. General Maintenance	5-2
	5-14. Troubleshooting	5-2
	5-15. Locating Trouble	5-2
	5-18. Troubleshooting Charts	5-2
	5-20. Repair	5-9
	5-21. Cover Removal	5-9
	5-23. Circuit Board Repair	5-9
	5-26. Indicator Light Replacement	5-9
	5-28. Tuning Assembly Repair	5-9
	5-30. Removal of Assembly	5-9
	5-31. Rotor (Stator) Repair	5-9
	5-32. Zero Set Assembly Repair	5-10
	5-34. Tuning Assembly Mechanical Alignment	5-10
	5-35. Tuning Assembly Electrical Tuning	5-10
	5-37. Reinstalling of Assembly	5-12
	5-38. Switch Assemblies	5-12
	5-40. Adjustments	5-12
	5-41. Power Supply Adjust	5-12
	5-42. Calibrator Circuit Adjust	5-12
	5-43. Local Oscillator Adjust	5-12
	5-44. First Mixer Pair Adjust	5-13
	5-45. Second Mixer Pair Adjust	5-13
	5-46. Active Filter Mixer Carrier Balance	5-13
	5-47. Input Mixer Carrier Balance	5-13
	5-48. BFO Adjust	5-14
	5-49. Active Filter Oscillator Adjust	5-14
	5-50. Output	5-14
	5-51. Bandwidth Flatness	5-14
	5-52. 3-DB Bandwidth Checks	5-14
	5-53. Output Amplitude Adjust	5-14
	5-54. AFC Adjustment	5-15
	5-55. Initial Input Attenuator Adjust	5-15
	5-56. Final Input Attenuator Adjust	5-16
	5-57. Final Calibrator Adjustment	5-16
VI.	REPLACEABLE PARTS	6-1
	6-1. Introduction	6-1
	6-4. Ordering Information	6-1
APPENDICES	I. Backdating	
	II. Option 01	

LIST OF ILLUSTRATIONS

Number	Title	Page
1-1.	Model 310A Wave Analyzer	1-1
1-2.	hp Model 297A Sweep Drive	1-2
2-1.	Conversion to Rack Mount	2-1
3-1.	Front Panel Controls	3-2
3-2.	Calibration	3-3
3-3.	Absolute Measurements	3-4
3-4.	Relative Measurements in Percent	3-5
3-5.	Relative Measurements in DB	3-6
3-6.	Reading DBM at Any Impedance Level	3-7
3-7.	Response Measurements	3-8
3-8.	Receiver Modes	3-9
4-1.	Overall Block Diagram	4-0
4-2.	Input Mixer	4-2
4-3.	Active Low-Pass Filter	4-3
4-4.	Automatic Frequency Control	4-4
4-5.	Combined Filter Signals	4-4
4-6.	Series Regulated Power Supply	4-5
4-7.	Indicator Light Circuit	4-6
5-1.	Frequency and Sensitivity Check	5-1
5-2.	Voltage Accuracy Check	5-2
5-3.	Assembly Location	5-3
5-4.	Capacitor Tuning Assembly	5-8
5-5.	Zero Set Assembly	5-10
5-6.	Rotor Alignment	5-11
5-7.	Tuning Assembly Adjustment Location	5-12
5-8.	Frequency Counter Drive Assembly	5-17
5-9.	Input Attenuator (Max Input Voltage SW)	5-20
5-10.	IF Attenuator (Half of Range SW)	5-21
5-11.	Bandwidth Selector (Bandwidth SW)	5-22
5-12.	RF Attenuator (Half of Range SW)	5-23
5-13.	Mode Selector (Mode SW)	5-24
5-14.	Input Amplifier, Local Oscillator and Mixer Waveforms	5-25
5-15.	Input Amplifier, Mixer, and Local Oscillator	5-25
5-16.	First Mixer Pair and 3 Mc Crystal Oscillator Waveforms	5-27
5-17.	First Mixer Pair, 3 Mc Crystal Oscillator	5-27
5-18.	Active LPF and Second Mixer Pair Waveforms	5-29
5-19.	Active LPF, Second Mixer Pair	5-29
5-20.	Meter, BFO, and Restored Frequency Output Waveforms	5-31
5-21.	Meter, BFO, Restored Frequency Output	5-31
5-22.	Automatic Frequency Control Waveforms	5-33
5-23.	Automatic Frequency Control	5-33
5-24.	Power Supply Ripple	5-35
5-25.	Power Supply	5-35
5-26.	Light Switching Sequence	5-37

LIST OF TABLES

Number	Title	Page
1-1.	Specifications	1-0
5-1.	Recommended Test Equipment	5-0
5-2.	Front Panel Troubleshooting	5-4
5-3.	AFC Troubleshooting	5-6
5-4.	-15 Volt Supply Troubleshooting	5-6
5-5.	+ 15 Volt Supply Troubleshooting	5-7
5-6.	Tuning Assembly Parts Identification	5-18
5-7.	Counter Drive Parts Identification	5-19
6-1.	Reference Designation Index	6-2
6-2.	Replaceable Parts	6-22
	Code List of Manufacturers	6-30

Table 1-1. Specifications

Frequency Range:
1 kc to 1.5 mc (200-cps bandwidth)
5 kc to 1.5 mc (1000-cps bandwidth)
10 kc to 1.5 mc (3000-cps bandwidth)

Frequency Accuracy:
±(1% + 300 cps)

Frequency Calibration:
Linear graduation, 1 division per 200 cps.

Selectivity:
3 IF bandwidths, 200 cps, 1000 cps, and 3000 cps. Midpoint of the passband (f_o) is readily distinguished by a rejection region 1 cps wide between the 3-db points.

	200-cps Bandwidth	1000-cps Bandwidth	3000-cps Bandwidth
Rejection*	Frequency (cps)	Frequency (cps)	Frequency (cps)
≥ 3 dB	$f_o \pm 108$	$f_o \pm 540$	$f_o \pm 1550$
≥ 50 dB	$f_o \pm 500$	$f_o \pm 2400$	$f_o \pm 7000$
≥ 75 dB	$f_o \pm 1000$	$f_o \pm 5000$	$f_o \pm 17000$

* Rejection increases smoothly beyond the -75-dB points.

Voltage Range:
10 μvolts to 100 volts full scale. Ranges provided by input attenuator and meter range switch in steps of 1:3 or 10 dB.

Voltage Accuracy:
±6% of full scale

Internal Calibrator Stability:
±1% of full scale

Dynamic Range:
Greater than 75 dB.

Noise and Spurious Response:
At least 75 dB below a full-scale reference set on the 0 dB position of RANGE switch.

Input Resistance:
Determined by input attenuator; 10k ohms on most sensitive range; 30k ohms on next range; 100k ohms on other ranges; shunt capacitance <100 pF on three most sensitive ranges; <50 pF on other ranges.

Automatic Frequency Control:
Dynamic hold-in range is ±3 kc, minimum, at 100 kc. Tracking speed is approximately 100 cps/sec. Locks on signals as low as 70 dB below a full-scale reference set on the 0 dB position of the RANGE switch.

Restored Frequency Output:
Restored signal frequency output is at least 0.25 volt (meter at full scale) across 135 ohms with approximately 30 dB of level control provided. Output impedance is approximately 135 ohms.

BFO Output:
0.5 volt across 135 ohms with approximately 30 dB of level control provided. Output impedance approximately 135 ohms.

Recorder Output:
1 VDC into an open circuit from 1000-ohm source impedance for single-ended recorders.

Receiver Function (Aural or Recording Provision):
Internal carrier reinsertion oscillator is provided for demodulation of either normal or inverted signal sideband signals. AM signal also can be detected.

Power:
115 or 230 volts ±10%, 50 to 400 cps; approx. 16 watts.

RFI:
Conducted and radiated leakage limits are below those specified in MIL-I-6181D.

Dimensions:

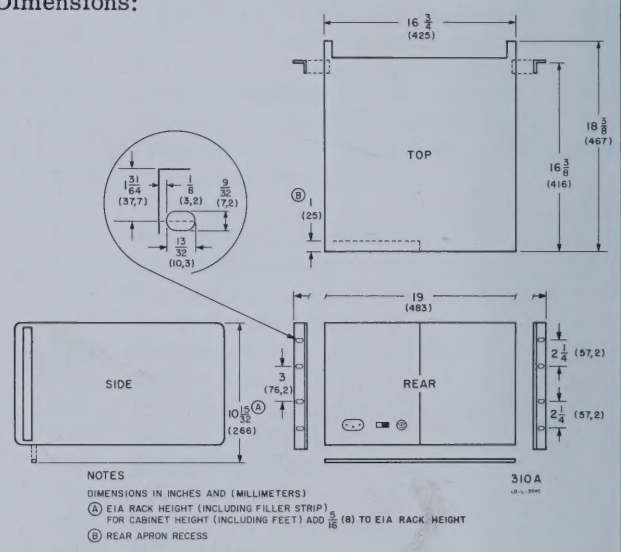

Accessories Available:
11001A Cable, BNC male-to-dual banana plug, 45 in. (1440 mm) long.

10503A Cable, BNC male connectors, 4 ft. (1220 mm) long.

10111A Adapter, banana plug-to-BNC female, Model 297A Sweep Drive, 11505A Bench Stand for 297A. K02-310A bracket for mounting 297A on 310A front panel.

Options:
01. Internal frequency calibrator providing check points every 100 kc. Interpolation accuracy (between check points): ±2 kc up to 1.4 mc, ±3 kc between 1.4 and 1.5 mc.

02. DB scale uppermost on meter face and extended to -25 dB.

SECTION I
GENERAL INFORMATION

1-1. INTRODUCTION.

1-2. DESCRIPTION.

1-3. The ⓗⓟ Model 310A Wave Analyzer separates and measures the various frequency components of an input signal so that the fundamental, harmonics, and intermodulation products may be analyzed. Any input signal component between 1 kc and 1.5 Mc may be located and measured. The only requirement is that it be within the dynamic range of the instrument, and that it be separated from other components by enough more than the selected bandwidth to make an isolated measurment possible (see Table 1-1).

1-4. DISTORTION MEASUREMENTS.

1-5. For measurements analyzing the distortion products in amplifiers, transducers, and other active devices, the Model 310A is provided with a RELATIVE mode of operation in which the reference frequency may be set to an arbitrary level, and the remaining components measured directly with respect to that reference, in either percent or dB.

1-6 ABSOLUTE MEASUREMENTS.

1-7. Alternatively, the Model 310A may be operated in an ABSOLUTE mode, under which conditions it acts as an accurate, tuned AF-RF voltmeter, measuring the amplitude of the components of any signal within its range to an accuracy of ±6%.

1-8. RESPONSE MEASUREMENTS.

1-9. In the BFO mode of operation, the Model 310A provides a constant-amplitude sine-wave output, at the frequency of the dial setting, for measuring the response of amplifiers, passive networks, or transmission systems.

1-10. AUTOMATIC FREQUENCY CONTROL.

1-11. In the AFC mode of operation, the Model 310A will lock on to and follow signals which have a drift rate as high as 100 cps/second. The dynamic hold-in range is ±3 kc (at 100 kc).

1-12. RESTORED FREQUENCY OUTPUT.

1-13. The component of the input signal which lies within the passband of the Model 310A is available at the OUTPUT terminal. Using this restored frequency output with an electronic counter makes possible the precise determination of the frequencies of intermodulation and other distortion products.

1-14. RECEIVER FUNCTIONS.

1-15. Single-sideband and amplitude-modulated signals may be received, detected, and monitored at the OUTPUT terminal.

310A-A-2323
310A-A-2324

Figure 1-1 Model 310A Wave Analyzer

1-16. APPLICATIONS.

1-17. The Model 310A Wave Analyzer is designed primarily to measure harmonic or intermodulation products in active circuits such as amplifiers, receivers, or transmitters, and carrier telephone systems. The instrument measures intermodulation distortion by either the SMPTE (Society of Motion Picture and Television Engineers) or the CCIF (International Telephonic Consultative Committee) method. In addition, the Model 310A measures the response of amplifiers, passive networks, and transmission systems up to 1.5 Mc. Its linear frequency dial and lack of band-switching make motor drive and automatic plotting a simple procedure.

1-18. INSTRUMENT IDENTIFICATION.

1-19. Hewlett-Packard uses a two-section eight-digit serial number (on instrument rear panel) to identify instruments (000-00000). The first three digits are a serial prefix used to identify instruments to published literature. If the first three digits of the serial number on your instrument are not the same as those which appear on the title page of this manual, there are differences between your instrument and the instrument described in this manual (refer to Appendix 1 of this manual).

1-20. ACCESSORY SWEEP DRIVE.

1-21. The hp Model 297A (Figure 1-2) is a motor drive unit designed to sweep tunable devices such as the Model 310A. The Model 11505A Bench Stand is available for mounting the Model 297A. Two sweep speeds and a neutral are provided, together with an output voltage proportional to dial position for driving X-Y recorders. Also, available is a special bracket kit (hp Model K02-310A) which permits the Model 297A to be mounted directly to the front panel of the Model 310A.

1-22. OPTIONS.

1-23. OPTION 01 CRYSTAL CALIBRATOR.

1-24. The Model 310A Option 01 is a standard hp Model 310A Wave Analyzer which has been modified by replacing the 100-kc calibration multivibrator (A3Q1, A3Q2, and associated components) with a 100-kc crystal oscillator which may be used for both amplitude and frequency calibration. Details of the modification will be found in Appendix II of this manual. A Model 310A Option 01 Modification Kit is available: hp Stock No. 310A-95A.

Figure 1-2. hp Model 297A Sweep Drive

1-25. OPTION 02 SPECIAL METER.

1-26. The Model 310A Option 02 is a standard hp Model 310A except that the front-panel meter has an extended dB scale, placed uppermost on the face of the meter. The voltage scale is below the dB scale.

1-27. WARRANTY.

1-28. The Model 310A carries the standard Hewlett-Packard Warranty against defects in materials or workmanship for one year from date of shipment. A copy of the warranty is included at the back of this manual.

SECTION II
INSTALLATION

2-1. INCOMING INSPECTION.

2-2. MECHANICAL INSPECTION.

2-3. Inspect the Model 310A as soon as possible after receipt of shipment. Should shipping damage be apparent, notify the carrier immediately (see warranty page at the back of this manual). For assistance of any kind, including help with instruments under warranty, consult your nearest Hewlett-Packard field office (see maps at the back of this manual).

2-4. ELECTRICAL INSPECTION.

2-5. A performance check is included in Section V of this manual. Use this check as an incoming inspection procedure, or at any time to verify that the instrument is operating within its specifications.

2-6. INSTALLATION.

2-7. The Model 310A is delivered as a cabinet mount instrument. A kit is available for the instrument for

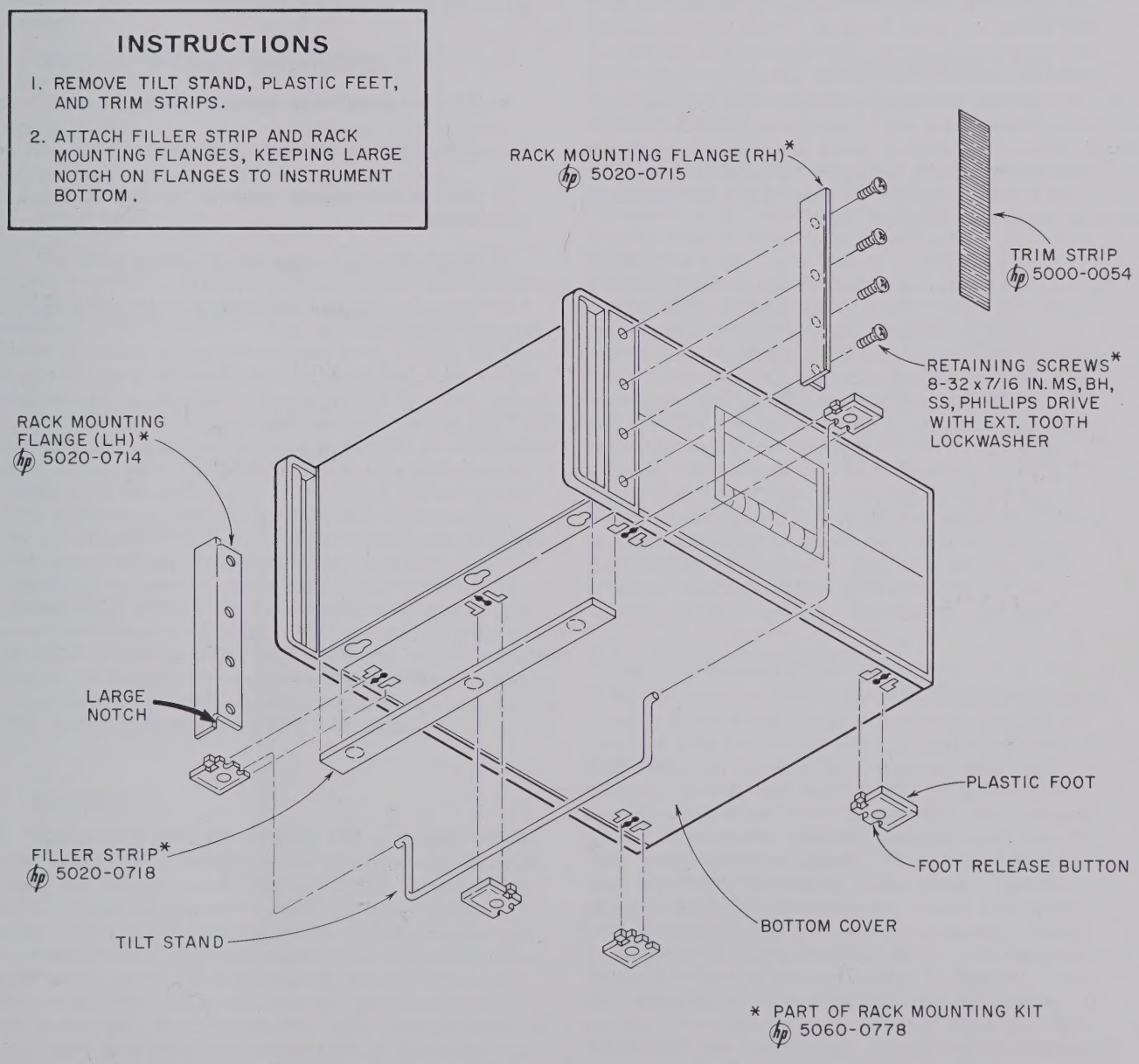

Figure 2-1. Conversion to Rack Mount

conversion to rack mount (refer to Figure 2-1 for rack mounting instructions and list of kit parts).

Note

If the rack is to be subject to shock or vibration, rear support must be provided to bear instrument weight. Alternately, the side handles may be removed and rack slides mounted in their place.

2-8. POWER REQUIREMENT.

2-9. The 310A can be operated from a 115- or 230-volt 50- to 400-cps source. A two-position slide switch at the rear of the instrument selects ac operation mode. The line voltage at which the instrument is set to operate appears on the slider of the switch. A 0.25-ampere slow-blow fuse is used for either 115- or 230-volt operation.

2-10. SAFETY POWER CORD.

2-11. To protect operating personnel the National Electrical Manufacturers' Association (NEMA) recommends that the instrument panel and cabinet be grounded. This instrument is equipped with a three-conductor power cord which grounds the instrument cabinet when plugged into an appropriate outlet.

WARNING

Your instrument is equipped with a power cord which grounds it when connected to a 3 contact grounded receptacle. If an extension power cord is used, it must be a 3-wire grounding type. Do not attempt to defeat this feature.

2-12. REPACKAGING FOR SHIPMENT.

2-13. To protect valuable electronic equipment during shipment, always use the best packing methods available. Your Hewlett-Packard field office can supply packing materials such as those used at the factory. Contract packaging companies in many cities can provide dependable custom packing on short notice. The following steps are a general guide:

a. Wrap instrument in heavy protective paper.

b. Protect panel with cardboard strips.

c. Use a strong cardboard or wooden box.

d. Use ample packing material around all sides of instrument.

e. Seal with heavy tape or metal bands

f. Mark container, "FRAGILE - DELICATE INSTRUMENT".

SECTION III
OPERATING INSTRUCTIONS

3-1. GENERAL.

3-2. The 310A is a highly selective AF-RF voltmeter, capable of accurate measurement of input signal components up to 1.5 Mc. Measurements may be made in calibrated values of volts and dBm or in relative values of percent and dB. A BFO mode of operation is provided, converting the instrument to a signal generator and response meter, suitable for measuring characteristics of amplifiers or passive elements. In addition, signals containing single-sideband or AM information may be detected and monitored.

3-3. FRONT PANEL CONTROLS.

3-4. The front panel controls and connectors are shown in Figure 3-1. Each control and connector is identified with a numbered call-out and an explanation of the function, given in the accompanying text.

3-5. FUNCTION.

3-6. The function of the instrument is controlled by the MODE switch. NORMAL is ordinarily used for tuning the instrument to a signal component that is to be measured, after which AFC can be selected to keep the instrument tuned to that component even though its frequency may vary up to ±3 kc. In these two modes, the signal passed by the filters in the Model 310A is restored to its original frequency and delivered to the OUTPUT terminals, where it may be measured with an electronic counter if desired. In the BFO mode, the instrument becomes a signal generator, providing a signal at the OUTPUT terminal that has a frequency equal to that set on the FREQUENCY dial. This signal may be used to test the response of amplifiers or passive circuits, the output of the circuit under test being connected to the Model 310A INPUT terminals and measured by the narrow-band tuned voltmeter. The remaining positions of the MODE switch, USB, LSB, and AM, select receiver functions, demodulating upper-sideband, lower-sideband, or amplitude-modulated signals respectively, and delivering the modulation to the OUTPUT terminal.

3-7. BANDWIDTH.

3-8. Three BANDWIDTH settings are provided: 3000 cps is for receiving sideband and amplitude-modulated signals, and is also useful during tuning, to make the desired component easier to find; 200 cps, in conjunction with the AFC setting of the MODE control, allows measurement of a component with minimum noise interference, or in the presence of closely adjacent components; 1000 cps simplifies the calculation of noise-power per cycle-bandwidth. For every measurement, there is a notch one cycle wide at the exact center of the band, allowing the signal component to be set with ZERO SET to the center of the band to take maximum advantage of the AFC range. The filter has a flat response nearly to band edge, therefore any marked variation of the signal as FREQUENCY is varied will indicate that more than one component is entering the passband. The notch at the center of the band can be used to locate these components

3-9. OPERATING PROCEDURE.

3-10. GENERAL.

3-11. The operating procedures (Figures 3-2 through 3-8) give step-by-step procedures for the various modes of operation. Steps of each procedure are numbered according to the sequence in which they are to be performed, and any control or connector used is identified with the number of the step in which it is used.

3-12. The main purpose of the 310A is to locate and measure the harmonic or intermodulation components of a signal at the INPUT terminals. In most cased, this is accomplished by setting RANGE to 0 dB, selecting RELATIVE, tuning FREQUENCY to the fundamental (or largest component), and adjusting MAX INPUT VOLTAGE and signal level to a meter reading of 1 (for percentage readings) or 0 dB (for decibel readings). Then the remaining components can be found and measured by changing the setting of FREQUENCY and RANGE. In some cases a signal larger than the fundamental component of interest may be present (60-cycle hum, for instance). Such a signal may be outside the tuning range of the instrument, yet will overload the amplifiers that precede the filter unless it is attenuated at the input to the instrument. Such overloading will produce intermodulation distortion within the instrument and result in erroneous readings.

3-13. INPUT OVERLOADING.

3-14. To avoid errors caused by large extraneous signals at the input, tune to any frequency of interest with RANGE at 0 dB, adjust MAX INPUT VOLTAGE for an up-scale reading, note the reading, then rotate MAX INPUT VOLTAGE one step clockwise and RANGE one step counterclockwise. If the meter reading changes more than 6%, input overload is indicated. Repeat the process until no change in reading takes place; then the preceding step is satisfactory. When such overload is present, the reference component cannot be set to 0 dB on the RANGE switch, therefore the dynamic range of the instrument is limited. The only alternative is to eliminate the interfering signal. Once the proper setting of MAX INPUT VOLTAGE has been found, it must not be changed counterclockwise as long as the particular large-amplitude signal is present (unless REF ADJUST is also changed to compensate).

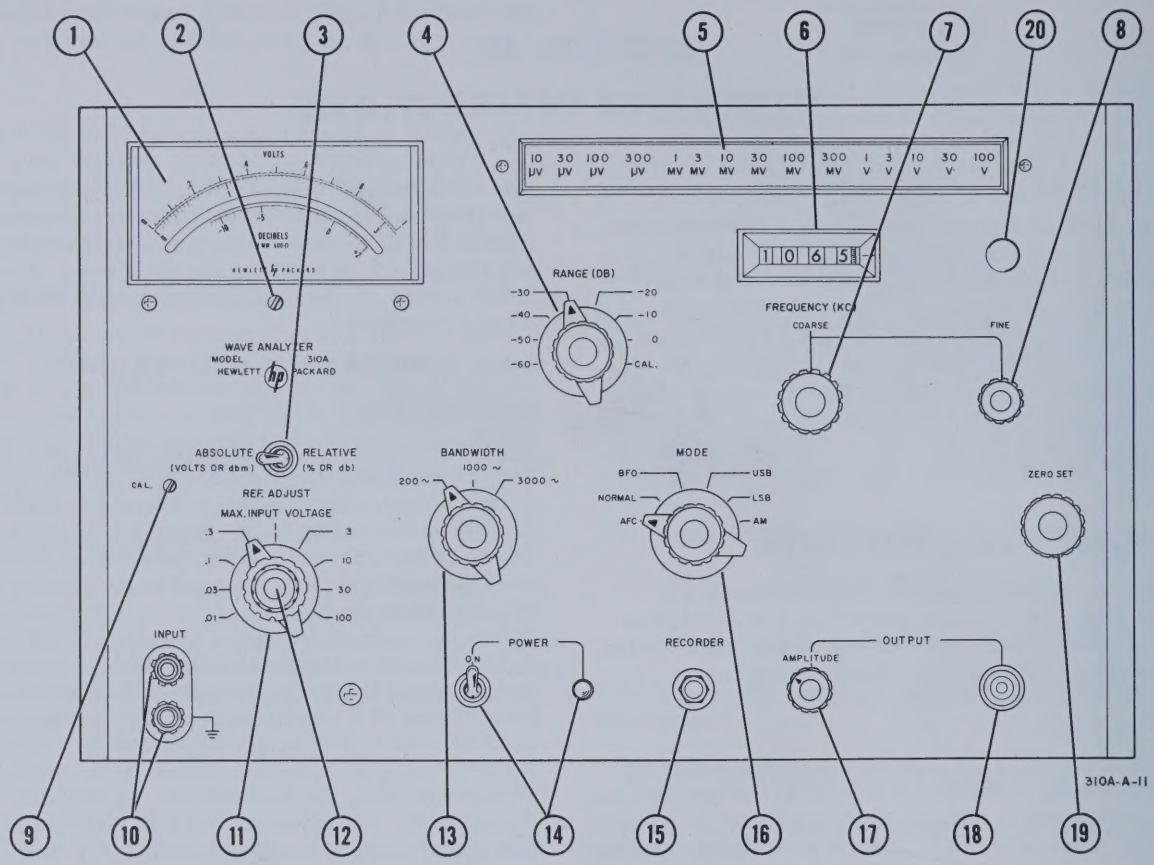

1. Meter indicates either (a) volts or dBm for 600-ohm systems) for ABSOLUTE setting or (b) in per cent (%) or dB for RELATIVE setting.
2. Meter mechanical zero set adjust.
3. ABSOLUTE-RELATIVE switch sets 310A input so meter indicates as described in 1 above. In RELATIVE position, a dBm reference may be set for any impedance system.
4. Combined RANGE and MAX INPUT VOLTAGE settings give full scale meter sensitivity.
5. Illuminated range indicator indicates full scale meter sensitivity.
6. Indicates tuned frequency in kilocycles.
7. COARSE control for changing tuned frequency.
8. FINE control for fine setting of tuned frequency.
9. CAL. adjust for full scale deflection (to "1") of meter needle when RANGE is in CAL. and instrument is tuned to approximately 100 kc.
10. INPUT for signal to be measured. The bottom terminal at cabinet ground potential (power line ground when Model 310A is connected to ac line).
11. MAX INPUT VOLTAGE selects maximum input voltage range; see 4 and 5 above.
12. REF ADJUST sets reference component of input signal for relative measurements (see 3 above).
13. BANDWIDTH selects band of frequencies passed by IF filter.
14. Indicator lights when POWER switch is ON and instrument connected to power source.
15. RECORDER. Two-conductor jack supplies 0.5 volt dc into 1000 ohms or less to drive X-Y or strip chart recorders.
16. MODE switch selects: (a) AFC (Automatic Frequency Control), tunes and locks 310A to input frequency, (b) NORMAL, for tuning and calibrating ing, (c) BFO (Beat Frequency Oscillator), generates same frequency as indicated by FREQUENCY (d) USB (Upper Sideband) and LSB (Lower Sideband), uses a carrier re-insertion oscillator 1450 cycles above or below band center to demodulate normal or inverted signal sideband signales, or (e) AM receives and detects AM signals.
17. AMPLITUDE control sets signal level at OUTPUT.
18. OUTPUT connector is a female BNC connector.
19. ZERO SET is for frequency dial calibration.
20. Location of Option 01 100 kc MARKER switch.

Figure 3-1. Front Panel Controls

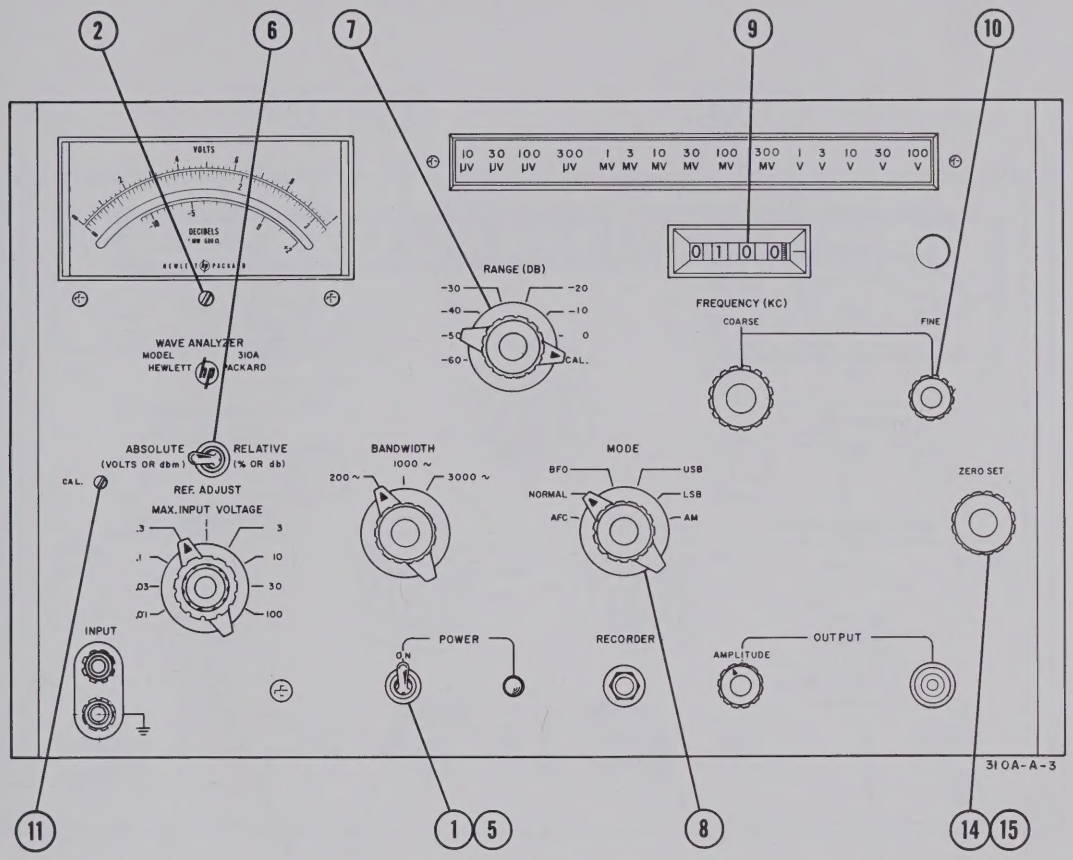

1. Turn POWER off.
2. Rotate meter adjustment screw clockwise until pointer is to left of zero.
3. Continue rotating clockwise until pointer coincides with zero mark. If pointer overshoots zero mark, repeat steps 1 and 2.
4. Rotate adjustment screw slightly counterclockwise to free mechanism. If pointer moves off zero mark, repeat steps 3 and 4.
5. Turn POWER on.
6. Select ABSOLUTE.
7. Set RANGE to CAL.
8. Set MODE to NORMAL.
9. Set FREQUENCY to 0100 KC.
10. Trim for maximum deflection on meter. Switch to AFC.
11. Adjust CAL for meter reading of 1.
12. Switch to NORMAL and set FREQUENCY to 0000.
13. Set RANGE for on-scale reading.
14. Adjust ZERO SET for meter null in middle of passband.
15. Option 01 only: Omit steps 12, 13, and 14. Depress MARKER, set FREQUENCY and adjust ZERO SET to null on crystal oscillator harmonic nearest frequency of interest.

Figure 3-2. Calibration

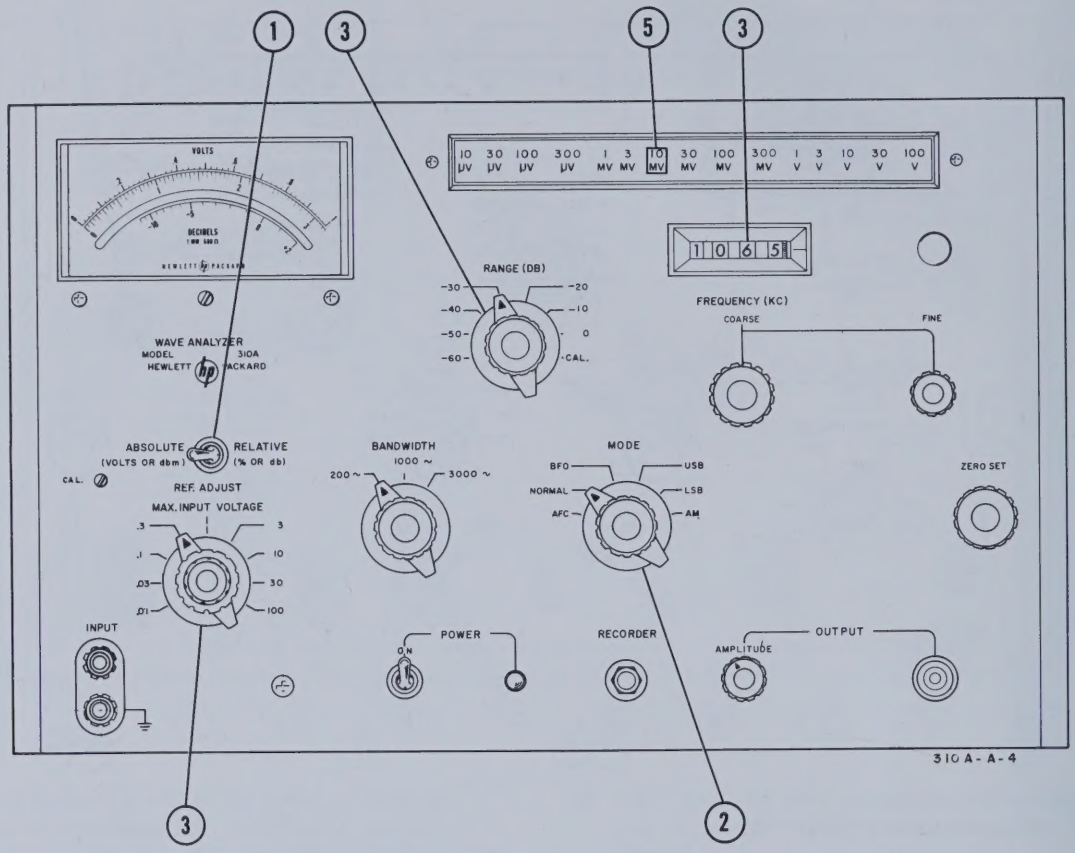

1. Select ABSOLUTE,

2. Set MODE to NORMAL.

3. Set FREQUENCY to component to be measured, changing MAX INPUT VOLTAGE and RANGE as required (Paragraph 3-13).

   Note

   Meter reading decreases slightly at center frequency. Increases slightly at either side of center frequency.

4. Set MODE to AFC.

   Note

   When set to AFC the meter reading will decrease slightly.

5. The lighted range window now indicates the full-scale voltage range of the meter. To read dBm in a 600-ohm system, subtract 10 dBm from meter reading for each step to the left of 1 V; add 10 dBm for each step to the right. For example, a meter reading of -3 dB and a range indication of 10 mV reads -43 dBm.

Figure 3-3. Absolute Measurments

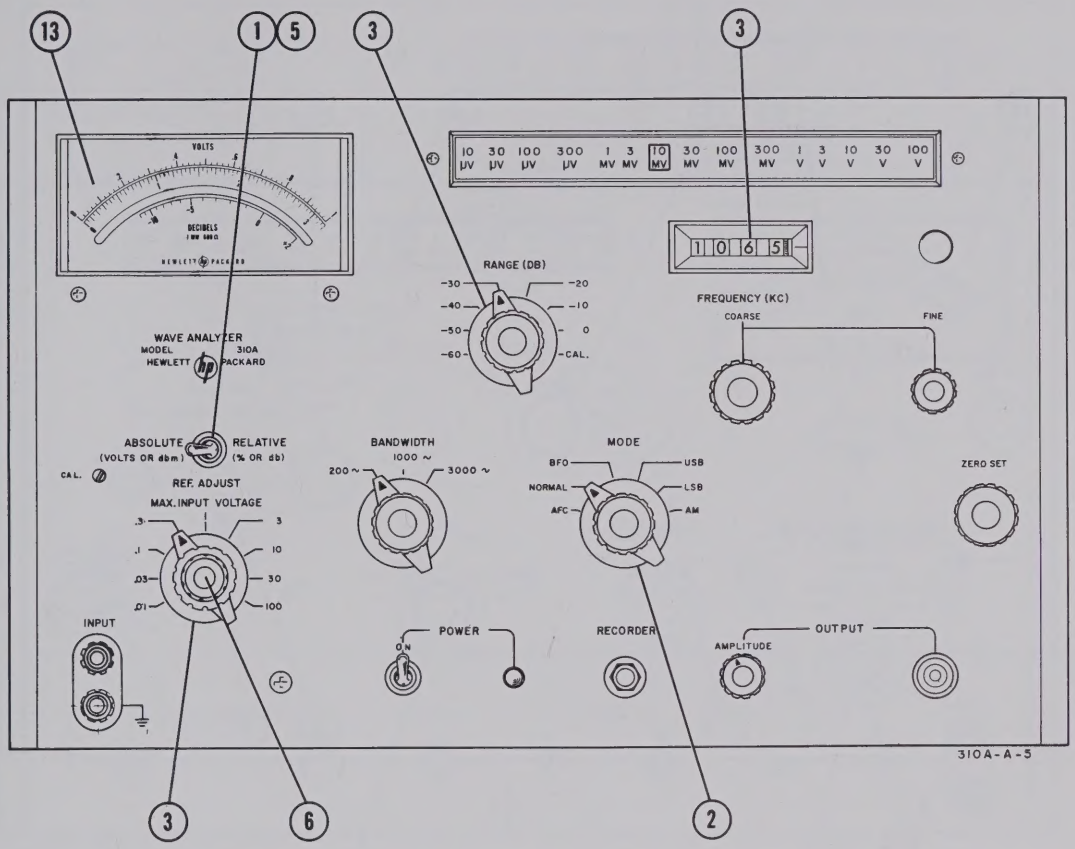

1. Select ABSOLUTE.
2. Set MODE to NORMAL.
3. Select largest component for use as reference. Set FREQUENCY to that component, changing MAX INPUT VOLTAGE and RANGE as required (Paragraph 3-13).
4. Set MODE to AFC.
5. Switch to RELATIVE.
6. Turn REF ADJUST counterclockwise.
7. Switch MAX INPUT VOLTAGE one step counterclockwise.
8. Turn REF ADJUST clockwise for meter reading of 1.
9. Set MODE to NORMAL.
10. Set FREQUENCY to component to be measured.
11. Rotate RANGE counterclockwise if necessary for an up-scale reading.
12. Set MODE to AFC.
13. Read amplitude of component in percent, setting decimal in accordance with reference setting made in step 7. To read voltage, switch MAX INPUT VOLTAGE back to setting of step 3 and select ABSOLUTE, adjusting RANGE for an up-scale reading.

Figure 3-4. Relative Measurements in Percent

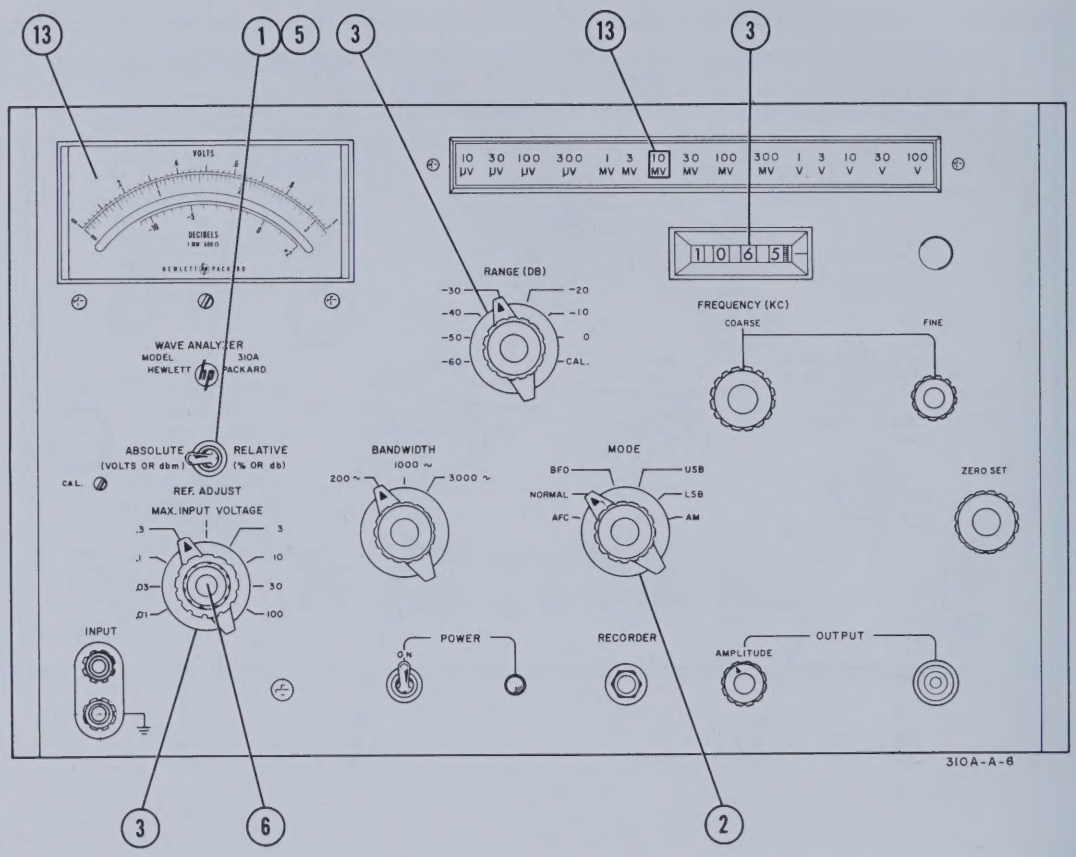

1. Select ABSOLUTE.
2. Set MODE to NORMAL.
3. Select largest component for use as a reference. Set FREQUENCY to that component, changing MAX INPUT VOLTAGE and RANGE as required (Paragraph 3-13).
4. Set MODE to AFC.
5. Switch to RELATIVE.
6. Turn REF ADJUST counterclockwise.
7. Switch MAX INPUT VOLTAGE one step counterclockwise.
8. Turn REF ADJUST clockwise for meter reading of 0 db.
9. Set MODE to NORMAL.
10. Set FREQUENCY to component to be measured.
11. Rotate RANGE counterclockwise if necessary for an up-scale reading.
12. Set MODE to AFC.
13. Subtract RANGE setting of step 3 from that of step 11 and add the difference to meter reading.
14. To read dBm in a 600-ohm system, switch MAX INPUT VOLTAGE one step clockwise and select ABSOLUTE, adjusting RANGE for an on-scale reading. Note indication in range window. Subtract 10 dBm from meter reading for each step to the left of 1 V; add 10 dBm for each step to the right. For example, a meter reading of -3 dB and a range indication of 10 mV reads -43 dBm.

Figure 3-5. Relative Measurements in DB

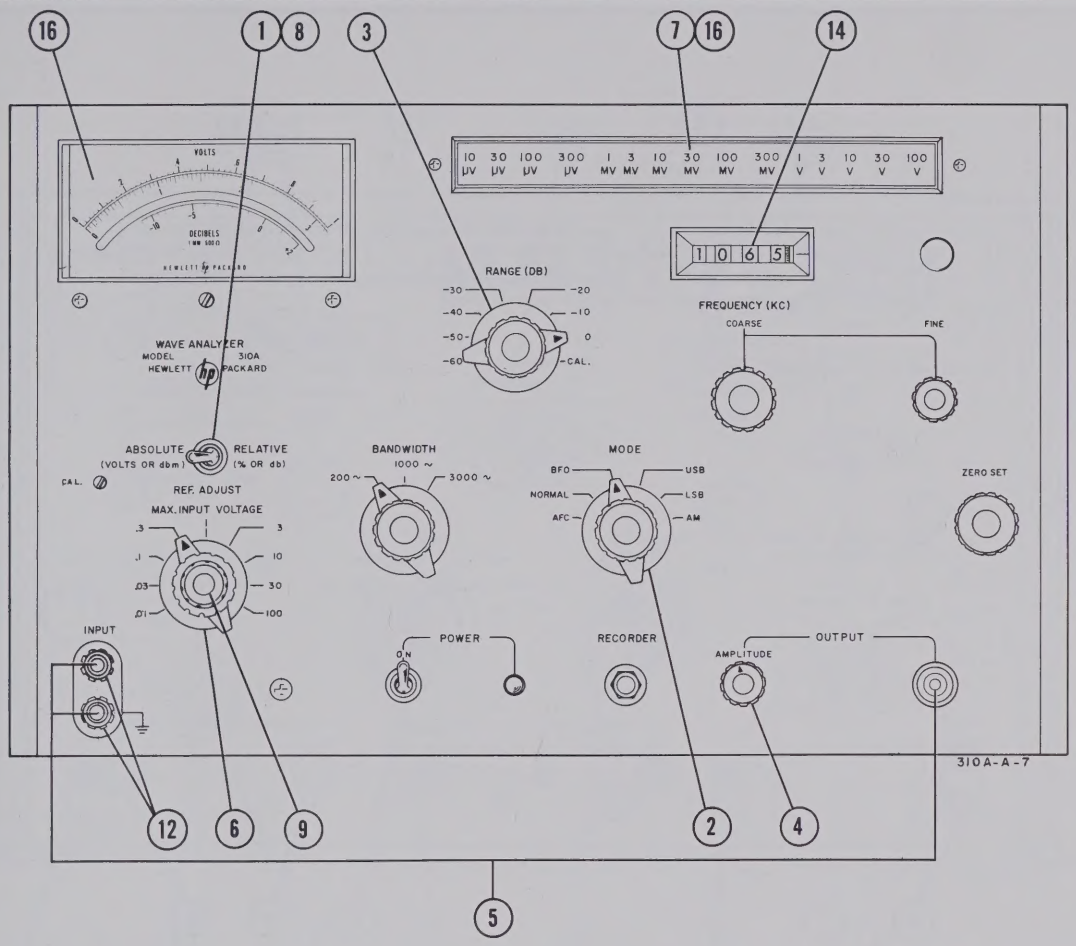

1. Select ABSOLUTE.
2. Set MODE to BFO.
3. Set RANGE to 0 dB.
4. Set AMPLITUDE counterclockwise.
5. Connect OUTPUT to INPUT.
6. Adjust MAX INPUT VOLTAGE and AMPLITUDE controls to give a voltage reading which corresponds to one millwatt of power in to the desired impedance system. This voltage may be found by: $v = \sqrt{Z/1000}$ (for example, in a 50-ohm circuit, $\sqrt{50/1000} = 0.224$ volts).
7. Note reading of range indicator.
8. Switch to RELATIVE.
9. Turn REF ADJUST counterclockwise.
10. Switch MAX INPUT VOLTAGE one step counterclockwise.
11. Turn REF ADJUST clockwise for reading of 0 dB.
12. Disconnect OUTPUT from INPUT, and connect signal to be measured to INPUT.
13. Set MODE to NORMAL.
14. Set FREQUENCY to component to be measured, changing MAX INPUT VOLTAGE and RANGE as required (Paragraph 3-13).
15. Set MODE to AFC.
16. The lighted range window now indicates full-scale range of meter. To read dBm, subtract 10 dBm for each step to the left of the reading in step 6; add 10 dBm for each step to the right. For example, a meter reading of -3 dB and a range indication of 10 mV reads -43 dBm.

Figure 3-6. Reading DBM At Any Impedance Level

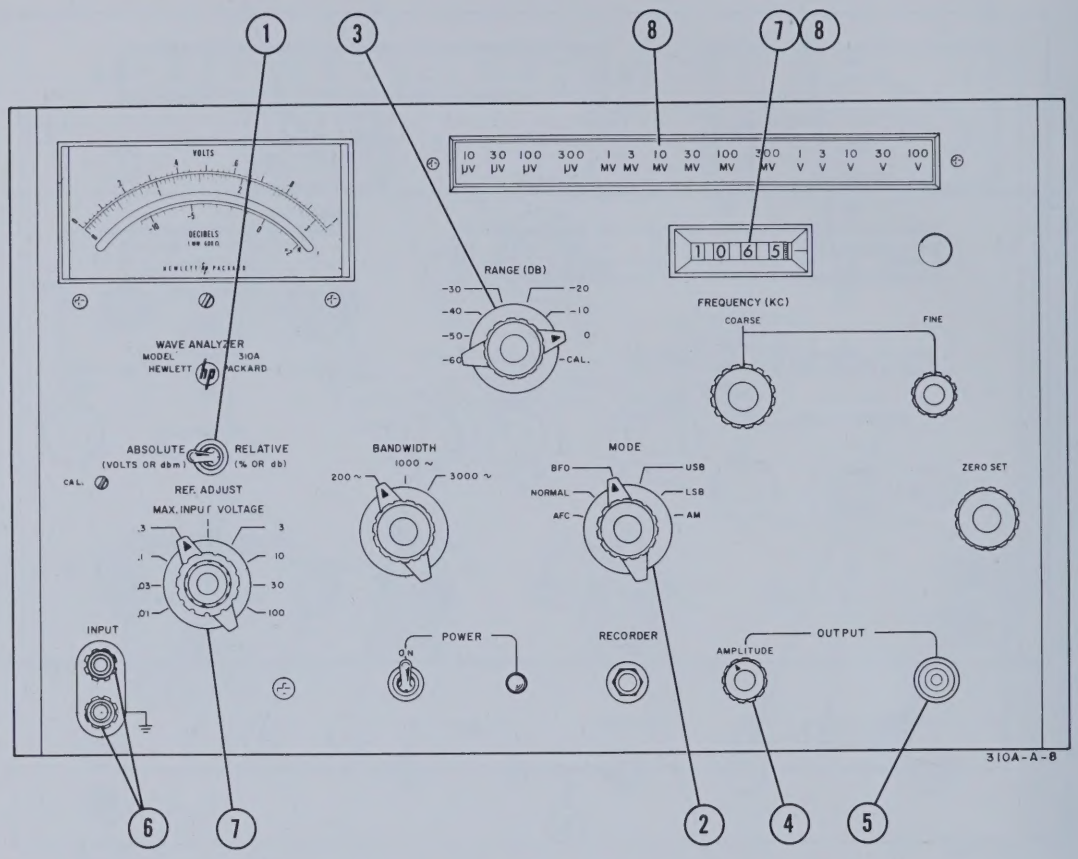

1. Select ABSOLUTE.
2. Set MODE to BFO.
3. Set RANGE to 0 DB.
4. Set AMPLITUDE counterclockwise.
5. Connect circuit to be tested to OUTPUT terminal. Use resistive network to match OUTPUT to input impedance of circuit. OUTPUT impedance is 135 ohms.
6. Connect output of circuit to be tested to INPUT terminal. Terminate circuit with characteristic impedance.
7. Set FREQUENCY to reference value (a point of maximum response), setting MAX INPUT VOLTAGE and AMPLITUDE for a meter reading of 1 (see Paragraph 3-13 for possible overload conditions).
8. Vary FREQUENCY, changing RANGE as required to read relative response. To read response in dB, set MAX INPUT VOLTAGE and AMPLITUDE for a meter reading of 0 DB in step 7. Observe indication in range window for each reading. Subtract 10dB from meter reading for each step to the left of 1 V. For example, a meter reading of -3 dB and a range indication of 10 mV reads 43 dB below reference.

Figure 3-7. Response Measurements

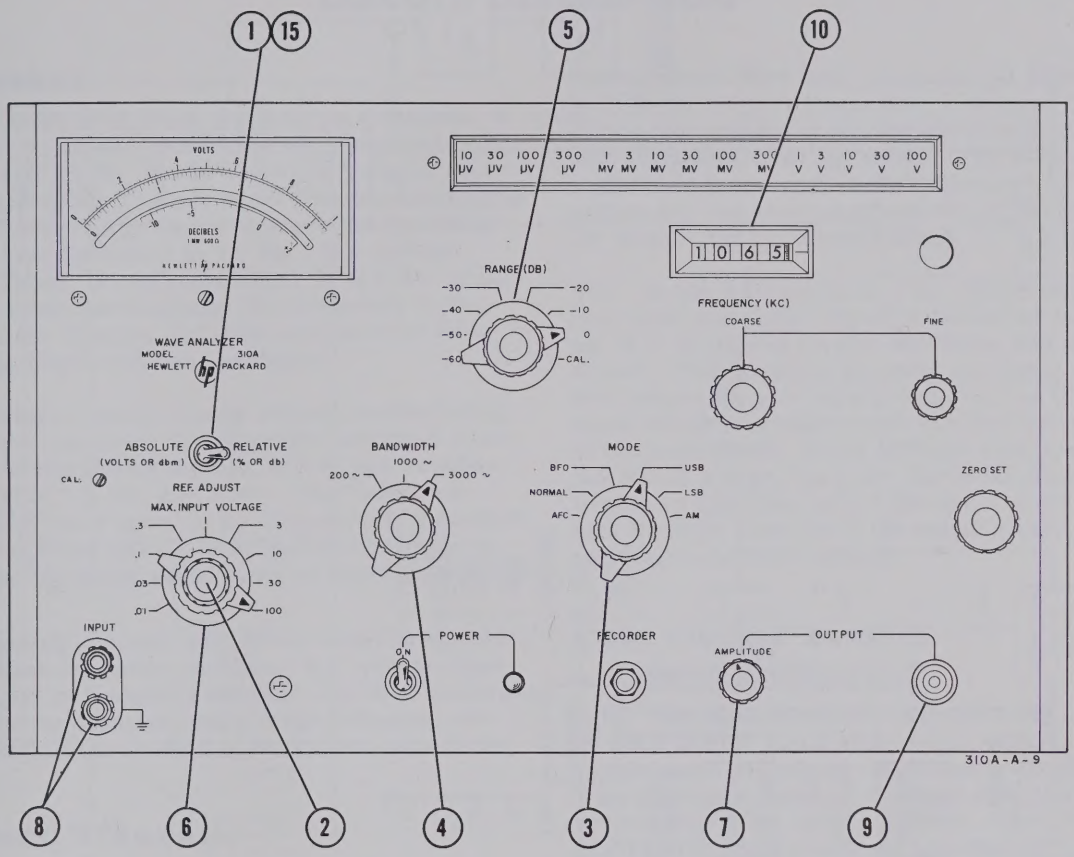

1. Select RELATIVE.
2. Set REF ADJUST to mid-range.
3. Set MODE to USB or LSB or AM.
4. Set BANDWIDTH to 3000 cps.
5. Set RANGE to 0 DB.
6. Set MAX INPUT VOLTAGE to 100.
7. Turn AMPLITUDE full clockwise.
8. Connect signal to INPUT.
9. Monitor OUTPUT with earphones or an audio amplifier.
10. Set FREQUENCY to signal.
11. Set MODE as required (USB, LSB, or AM).
12. Turn RANGE counterclockwise until signal level is satisfactory.
13. If signal level is too low with RANGE set to -60 dB, turn MAX INPUT VOLTAGE counterclockwise until a suitable level is reached.
14. Set OUTPUT signal volume with REF ADJUST.
15. To measure signal level, switch to ABSOLUTE and set MAX INPUT VOLTAGE for an up-scale reading. Keep RANGE at -60 dB unless MAX INPUT VOLTAGE is on 100.

    Note: For convenience, signals can be monitored with RANGE set to arbitrary levels. Overloading the input will produce audible distortion, and will increase the apparent bandwidth of the signal.

Figure 3-8. Receiver Modes

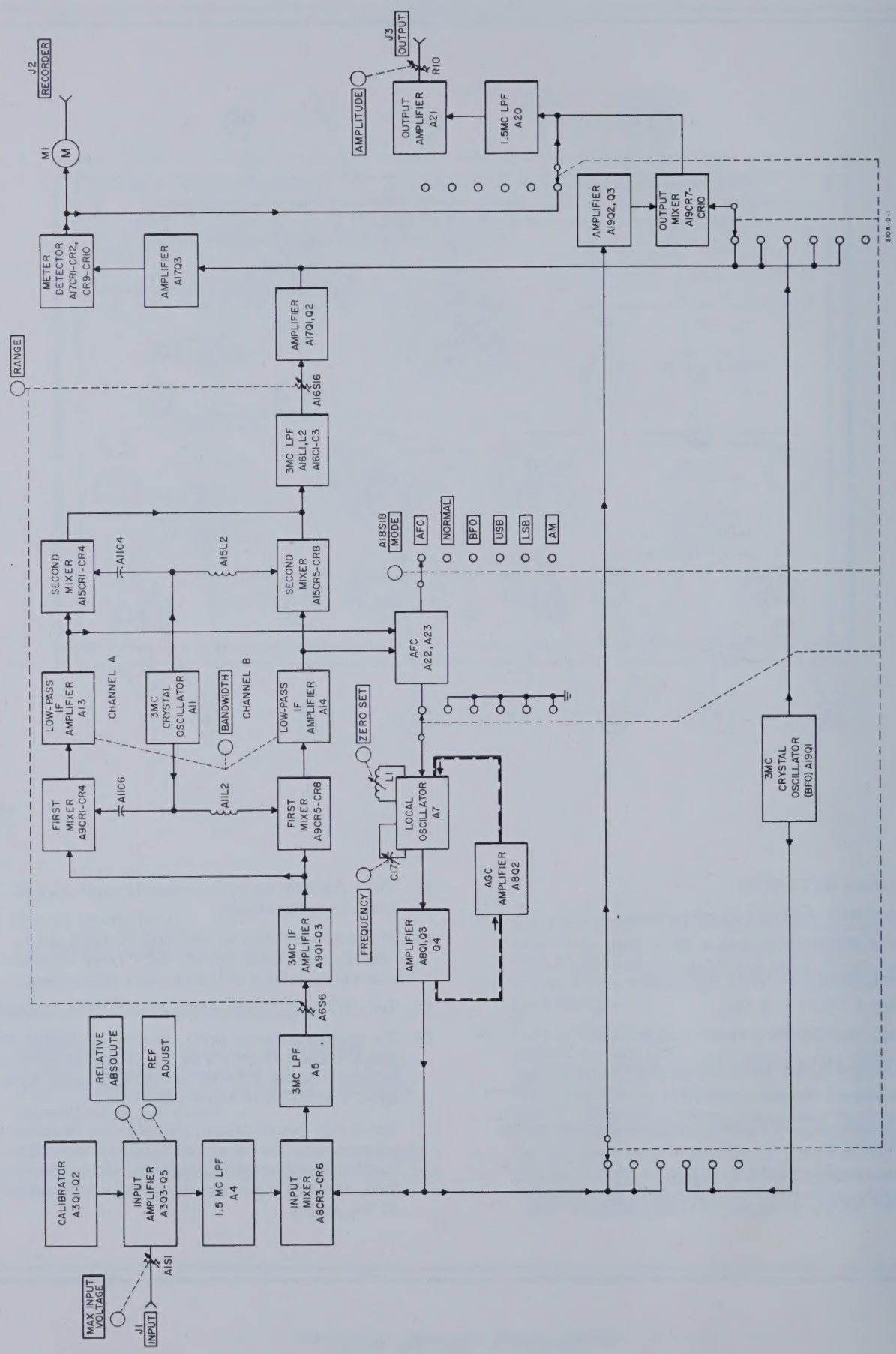

Figure 4-1. Overall Block Diagram

SECTION IV
CIRCUIT DESCRIPTION

4-1. GENERAL.

4-2. The Model 310A Wave Analyzer is a narrow-band AF-RF Voltmeter, tunable to any frequency between 1 kc and 1.5 Mc. Sharp cut-off filtering is accomplished at audio frequencies by a double-heterodyne process. The local Oscillator is above the operating frequency, tunable from 3 to 4.5 Mc. The crystal (BFO) Oscillator, crystal controlled, is at 3 Mc, transferring the components around this frequency to the audio range for filtering and then back again to 3 Mc by a phasing single-sideband technique.

4-3. For single-control tuning without bandswitching, all filters are low-pass. To eliminate unwanted mixer products and extraneous signals, filters are included which cut off at 1.5 Mc, and 3 Mc. The "front end" is essentially "wide open" to all frequencies, therefore an attenuator (MAX INPUT VOLTAGE) is included to attenuate the incoming signal to an acceptable amplitude.

4-4. Accessory circuits include automatic frequency control, a beat-frequency oscillator for carrier insertion and to act as a signal generator, a 100-kc calibrator, regulated power supplies, and a lamp-indicating network to simplify the readout of instrument sensitivity.

4-5. BLOCK DIAGRAM.

4-6. Figure 4-1 shows an overall block diagram of the Model 310A. An examination of the switching functions shown in the block diagram will clarify the various modes of operation. Basically, the signal applied to the INPUT terminals is attenuated to an acceptable level by MAX INPUT VOLTAGE attenuator A1S1, amplified by input amplifier A3Q3-Q4, then filtered by 1.5-Mc low-pass filter (A4) in order to eliminate undesired signals above 1.5 Mc. First local oscillator A7, tunable from 3 to 4.5 Mc, produces a 3-Mc beat-frequency with incoming signals in the 0 to 1.5 Mc range. Other mixer products are attenuated by 3-Mc low-pass filter A5.

4-7. After attenuation and amplification, the signal is delivered to the bandpass filter, where it is heterodyned to audio frequency, filtered, and transferred back again to 3 Mc. Audio signals from the filter, drive the automatic frequency control circuits which control first local oscillator A7. MODE switch A18S18 grounds the automatic frequency control output in all positions except AFC. The filtered 3-Mc signal, attenuated by RANGE attenuator A16 and amplified by meter amplifier A17Q1-Q3, is delivered to the meter detector.

4-8. The meter detector delivers signals to meter M1 and also, in the AM position of the MODE switch, drives output amplifier A21, delivering detected modulation to the OUTPUT connector. In the AFC and NORMAL positions of the MODE switch, the 3-Mc signal from the bandpass filter is applied to the output mixer, where first local oscillator A7 converts it back to its original frequency. Low-pass filter A20 eliminates residual 3 Mc Oscillator signal and the sum frequency from the mixer. The filtered signal (difference frequency) is then delivered to output amplifier A21 and is available at the OUTPUT connector for monitoring and measurement.

4-9. In the BFO position of the MODE switch, the first local oscillator signal is combined with the output of 3-Mc (BFO) crystal oscillator A19 in the output mixer. This converts the local oscillator signal to the dial frequency, providing a signal at the OUTPUT terminal which is synchronized with the tuned frequency of the instrument. In the USB and LSB positions of the MODE switch, the 3-Mc (BFO) oscillator frequency is altered approximately 1450 cps, low for LSB and high for USB, then fed to the output mixer to demodulate single-sideband signals.

4-10. CIRCUIT DETAILS.

4-11. INPUT ATTENUATOR.

4-12. The input attenuator (Figure 5-15), controlled by MAX INPUT VOLTAGE switch A1S1, is a frequency-compensated resistance-capacitance divider network. This attenuator reduces the input signal level to prevent overloading of the input amplifier. The setting of MAX INPUT VOLTAGE combined with that of RANGE switch A6S6-A16S16 determines the full-scale sensitivity of the Model 310A.

4-13. INPUT AMPLIFIER.

4-14. The input amplifier is a three-stage amplifier with a gain of about 10 dB. About 25 dB of feedback minimizes distortion as long as the input attenuator is set to prevent overdriving the amplifier. Two back-biased diodes, A3CR4 and A3CR5, prevent an overload signal from damaging the circuit. The diodes will conduct on an excessive signal and will limit the drive to the base of A3Q3. The gain of the amplifier is set by CAL adjustment R3, as long as switch S3 is in the ABSOLUTE position. With S3 in the RELATIVE position, input gain may also be adjusted with REF ADJUST control A1R9.

4-15. INPUT MIXER.

4-16. After extraneous signals (images above 6 Mc) are removed by 1.5-Mc low-pass filter A4, the signal, attenuated by resistance network A8R4-R7, is applied to input mixer A8CR3-CR6, where it is mixed with the local oscillator output. The local oscillator is tunable between 3 and 4.5 Mc, therefore difference frequencies can appear between 1.5 and 4.5 Mc, while sum frequencies can appear between 3 and 6 Mc, depending in each case on local oscillator and signal frequencies. The sum frequencies are filtered out by 3-Mc low-pass filter A5. The input mixer is balanced to suppress the local oscillator frequency.

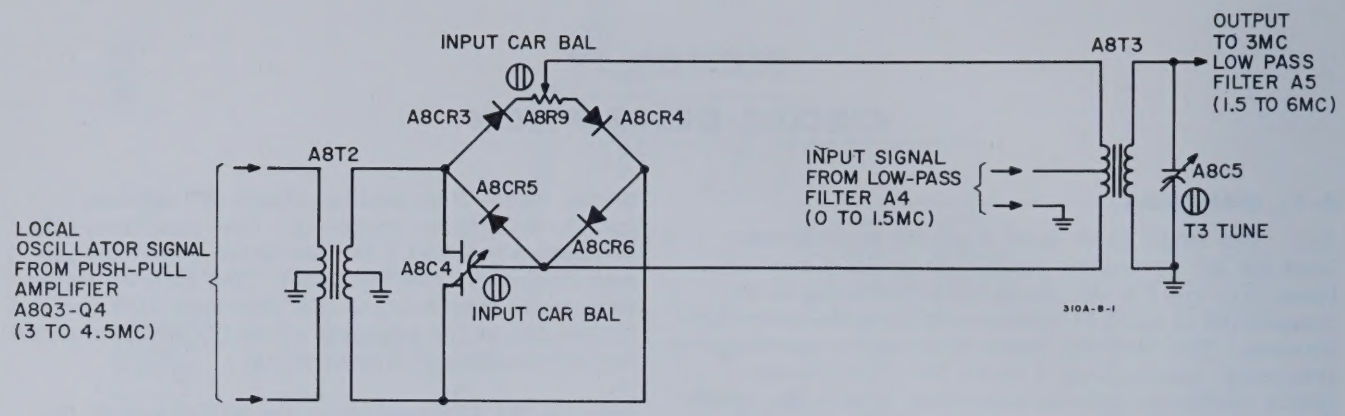

Figure 4-2. Input Mixer

4-17. A simplified schematic of the input mixer is shown in Figure 4-2. The local oscillator signal, applied to the input mixer by the secondary of transformer A8T2, drives the diodes of two adjacent arms of the bridge alternately into conduction. As the diodes conduct, the signal voltage is induced in the secondary of A8T3, with its polarity changed at the rate of the oscillator frequency. Capacitor A8C4 and resistor A8R9 are adjusted to balance out the oscillator voltage. Capacitor A8C5 tunes the secondary of transformer A8T3 to 3 Mc, tending to reject undesired mixer products.

4-18. LOCAL OSCILLATOR.

4-19. The first local Oscillator A7 (Figure 5-15) is basically a Colpitts circuit, generating a frequency between 3 and 4.5 Mc. The variable tuning element is capacitor C17, adjusted by the front-panel FREQUENCY control. Front-panel ZERO SET adjustment L1 sets the local oscillator frequency to 3 Mc when the front-panel indicator reads 0000. Internal adjustments A7C5 (Ratio Adj) sets the oscillator frequency to 4.5 Mc when the front-panel indicator reads 1500 KC. Variable inductor A7L2 allows setting the ZERO SET control to mid-range when the oscillator is properly adjusted. Capacitor A7C4 is a factory-selected part, chosen to properly set the range of A7C5. When the MODE switch is in the AFC position, frequency-control voltage is applied to back-biased diodes A7CR1 and CR2, which acts as voltage sensitive capacitors to modify the frequency of the local oscillator, holding a varying signal within the passband of the Model 310A.

4-20. The output of the first local oscillator is taken from the emitter of A7Q1, amplified by A8Q1, and applied by push-pull common-base amplifier A8Q3-Q4 to the primary of transformer A8T2. The secondary of A8T2 couples the oscillator voltage to input mixer A8CR3-CR6, as explained in Paragraph 4-16. Oscillator output from the secondary of A8T2 is rectified by A8CR2 to maintain a negative charge across A8C10 proportional to the amplitude of the oscillator output. AGC amplifier A8Q2 applies this voltage as bias to the base of oscillator A8Q1, maintaining the oscillator output substantially constant across the tuning range. Oscillator output is also fed from the secondary of A8T2 to the output mixer (Figure 5-17) when MODE is in AFC, NORMAL, or BFO. The output mixer converts the IF signal back to its original frequency after it has been filtered by the active bandpass filter. In the case of BFO, the 3-Mc beat-frequency oscillator is applied to the output mixer, and the local oscillator signal is converted to the dial FREQUENCY setting.

4-21. ACTIVE LOW-PASS FILTER.

4-22. The low-pass filter provides the 200, 1000, or 3000 cps selectivity of the Model 310A. By phasing techniques, the signal is converted to audio frequency, filtered, and returned to 3 Mc. A block diagram of the filter is shown in Figure 4-3.

4-23. After passing through 3-Mc low-pass filter A5, the signal is delivered to RANGE switch A6 (Figure 5-17), where the amplitude is set to a level appropriate for the following stages. 3-Mc amplifier A9Q1-Q3 then amplifies the signal and applies it to the input transformers of the two filter channels, A9T1 in channel A and A9T3 in channel B. Capacitor A9C7 adjusts the frequency response at the output of the 3-Mc amplifier to produce a symmetrical passband at the output of the active bandpass filter. Capacitors A9C11 and C16 resonate the input transformers of the two channels to 3 Mc.

4-24. The output of 3-Mc crystal oscillator A11Q1 (second local oscillator) amplified by A11Q2-Q3, is shifted 45° by an RC network to channel A and an RL network to channel B. The RC network is the resistance reflected by autotransformer A9T2 and the capacitance of A11C6. The RL network is the resistance reflected by autotransformer A9T4 and the inductance of A11L2. The autotransformers convert the single-ended oscillator signal to a balanced drive to the two mixers, where the 3-Mc oscillator signals are mixed with the input signal. The result is two audio-frequency voltages which are 90° out of phase (higher frequency components are also present). The phase difference between the two channels is adjusted by A9C13 and C18. If the signal is above dial setting, channel B lags channel A. If the signal is below dial setting, B leads A in phase. Capacitor A11C3 is adjusted for an oscillator

frequency of 3 Mc +25 cps. The 25-cycle detuning prevents the 3-Mc BFO signal from falling in the notch in the center of the passband during response measurements (Figure 3-7).

4-25. The output of each mixer is passed through two positive-feedback RC low-pass filters, each including a three-stage high-gain amplifier. The filters have a maximally flat frequency response to nearly their cut-off frequency, beyond which the response drops off at 24 dB per octave. Cut-off is 100, 500, or 1500 cycles per second, depending upon the setting of BANDWIDTH switch A10S10. Therefore, signals 100, 500, or 1500 cycles either side of 3 Mc +25 cps will pass through the filter, resulting in a bandpass of 200, 1000, or 3000 cycles respectively. Signals above and below 3 Mc retain their identity and are later restored to their original frequencies by virtue of the phase relationships between channels. Capacitance coupling between the two sections of the filter limits low-frequency response to approximately one-half cycle, thus creating a notch one cycle wide in the center of the passband (the frequency to which the dial is set).

4-26. The two signals are then applied to the output mixer pair, where they modulate the 3-Mc oscillator output from A15Q1. A 90° phase difference in oscillator voltage is created by capacitor A15C4 and inductor A15L2 in conjunction with the resistance reflected by transformers A15T1 and T3. The audio signal creates two sidebands in each mixer output, equidistant above and below 3 Mc, but with differing phase characteristics between channels. The signals are combined in transformer A15T2. If the original signal was above 3 Mc, the upper sidebands add and the lower one cancels. If the signal was below 3 Mc, the lower sidebands add and the upper ones cancel. The 3-Mc oscillator signal is suppressed by the balanced mixers.

4-27. AFC CIRCUIT.

4-28. The audio signal from each channel of the active low-pass filter is applied to the input of the AFC circuit. A block diagram of this circuit is shown in Figure 4-4. The complete schematic diagram appears in Figure 5-23. The circuit converts phase and frequency information from the two audio channels to a correction voltage which is applied to two back-biased diodes which act as voltage-sensitive capacitors (A7CR1 and CR2) in the plate circuit of local oscillator A7Q1. The change in capacitance coupled into the oscillator plate circuit by A7T1 modifies the oscillator frequency in such a direction as to bring the signal close to the center of the active filter passband (3 Mc +25 cps).

4-29. The signals from the two audio channels are amplified by A22Q1 and Q3. Channel A output from

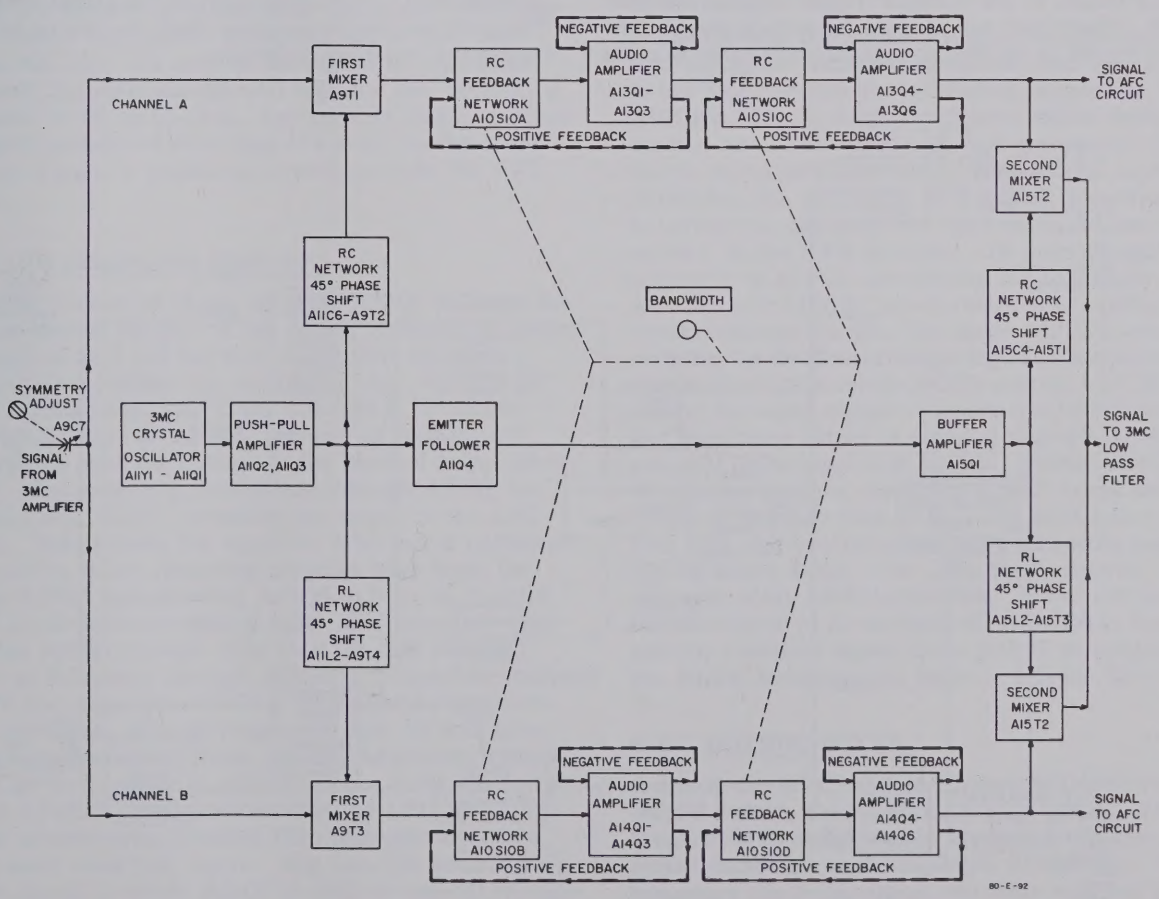

Figure 4-3. Active Low-Pass Filter

A22Q3 is amplified and rectified by AGC amplifier A22Q2, charging capacitor A22C24. When the charge on A22C4 is large enough to turn on diodes A22CR2-CR5, a voltage-driver action takes place between the diodes and resistors A22R5 and R38, reducing the level of the incoming signals.

4-30. SCHMITT TRIGGER. The two amplified signals are combined through diodes A22CR7 and CR9. The diodes allow the negative-going half of the channel B signal to pass, and allow the positive-going half of the channel A signal to pass. The result (with the base of A22Q4 disconnected) is illustrated in Figure 4-5. This signal is applied to the base of A22Q4 in the Schmitt trigger circuit. The Schmitt trigger is a rectangular-wave generator with two triggering levels. When the signal moves negative past the lower switching limit, A22Q4 turns off, its collector voltage goes positive, driving A22Q5 into conduction, and feedback between the emitters of the two transistors holds the circuit in this condition until the incoming signal moves positive past the upper switching limit. The resulting output is an unsymmetrical square wave, the positive or negative regions being longer depending upon which channel is leading in phase. The wafeform with the base of A22Q4 connected is illustrated in Figure 5-22 (Note: with A22Q4 connected, most of the positive portion of the waveform is clipped by transistor conduction). When channel A is leading (signal below dial setting), the square wave is positive more of the time.

4-31. The output of the Schmitt trigger drives the base of A22Q6. There are two outputs from this stage. The collector output is applied to a positive counter consisting of A22C16, A23CR1, CR2, and R1. A22C16 differentiates the square wave. Diodes A23CR1 and CR2 transfer the positive-going pulses to resistor A23R3. The output of the counter, filtered by A23R3 and C2, is proportional to the frequency of the signal from A22Q6. This voltage moves positive when the tuning error increases in either direction.

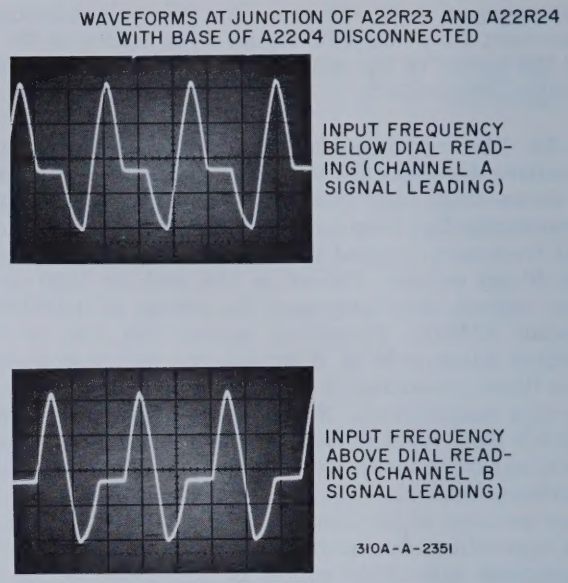

Figure 4-5. Combined Filter Signals

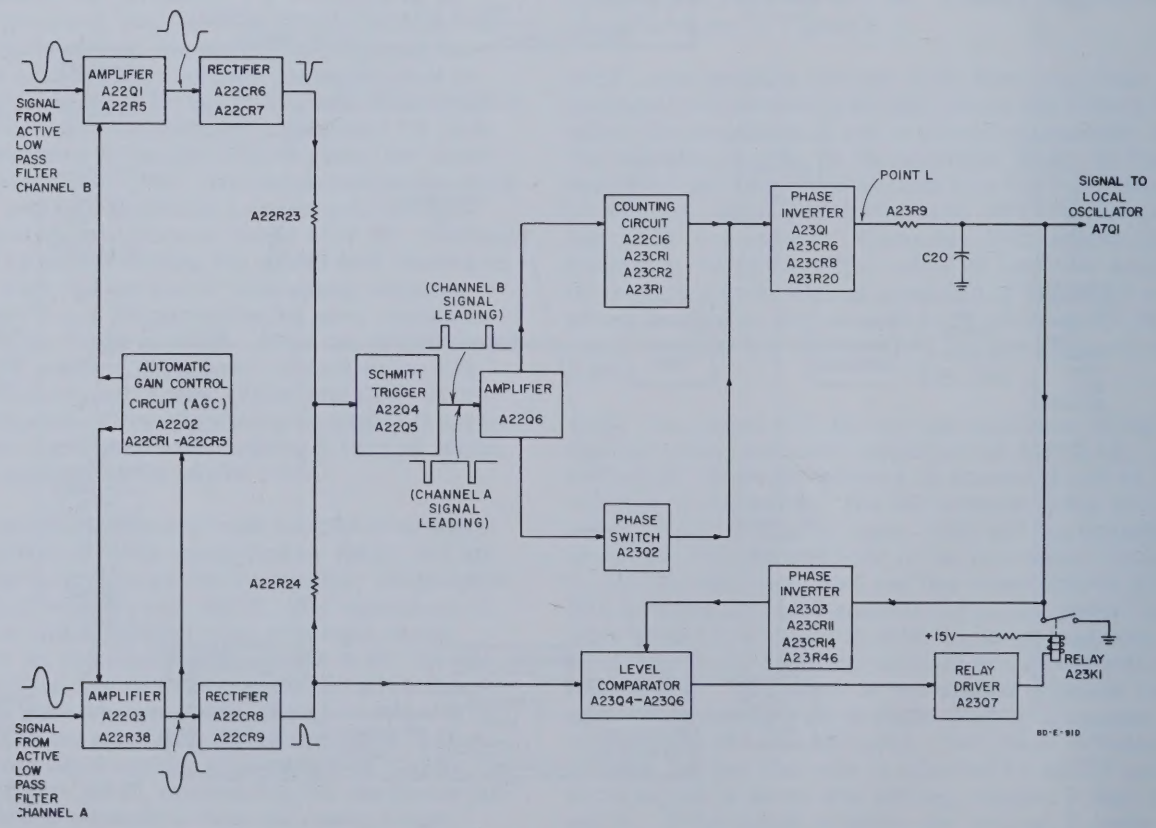

Figure 4-4. Automatic Frequency Control

4-32. The emitter output of amplifier A22Q6, filtered by capacitor A23C5 and resistor A23R15, is positive or negative depending upon the symmetry of the square wave. This dc voltage is amplified by phase switch A23Q2, and applied, along with the counter output, to the base of phase inverter A23Q1.

4-33. PHASE INVERTER. The voltage at point L (Figure 5-23) is such that diodes A23CR6, CR7, and CR8 act as switches, taking the amplified counter output from either the collector or the emitter (180° out of phase) of A23Q1, depending upon the bias level delivered by phase switch A23Q2. Thus, the phase switch determines the polarity of the correction voltage, while the counter determines the amplitude. The resulting output is delivered to the local oscillator.

4-34. If a signal is above dial frequency but within the passband of the active low-pass filter, the signal from channel B will lead that from channel A. The square-wave output of Schmitt trigger A22Q4-Q5 will then be negative longer than it is positive, and the drive to phase switch A23Q2 will be negative. The phase switch output will be less negative, increasing conduction through phase inverter A23Q1. The collector output switch in the phase inverter circuit, A23CR6-CR7, will turn off, and emitter output switch A23CR8 will turn on, delivering a more positive voltage to voltage-sensitive capacitors A7CR1-CR2 in the local oscillator circuit. This constitutes an increase in the back-bias on these two diodes, decreasing their capacitance, and raising the frequency of the local oscillator. The amplitude of the correction voltage is set by Neg Out control A23R20. As long as the signal is within the passband, the AFC circuit will hold for dial mistuning (or signal drift) up to ±3 kc. Beyond this limit, or when the signal measures less than 1/4 scale on the most sensitive range, a disabling circuit grounds the AFC output.

4-35. AFC DISABLING CIRCUIT.

4-36. The circuit of phase inverter A23Q3 is much the same as that of A23Q1. If the output of A23Q1 exceeds the range of -0.5 to +1.0 volt, a positive signal is delivered from either the emitter or the collector of A23Q3 through switches CR12 and CR13, or CR14. This signal turns on A23Q6, turning off A23Q5, and delivering a positive voltage to the base of relay driver A23Q7. The resulting conduction through A23Q7 energizes relay A23K1, shorting the output of the AFC circuit. This allows the signal to drift out of passband of the active filter removing negative bias from the base of A23Q4 and allowing A23Q4 to turn on, holding A23Q5 in the non-conducting state, and therefore holding relay A23K1 closed. The bias for this holding circuit is delivered through A23CR8, filtered by resistor A23R40 and capacitor A23C10. If a signal reappears in the passband, Schmitt trigger A22Q4-Q5 will pass its negative switching limit, turning A23Q4 on, releasing A23K1 and restoring AFC control. Hold-Off Level control A23R27 is adjusted so that the AFC will take control of any signal greater than one-quarter scale on the most sensitive range. Neg Cut-Off control R46 adjusts phase inverter A23Q3 to deliver cut-off voltage to A23Q6 when the AFC output exceeds the range of -0.5 to 1.0 volt.

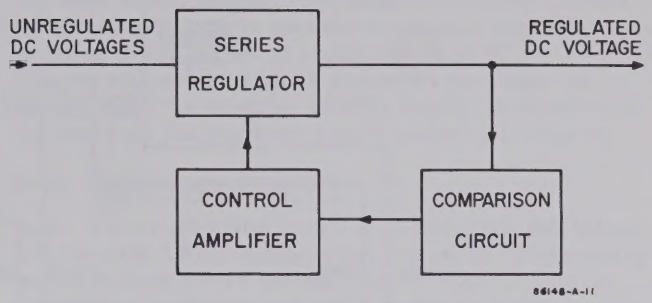

Figure 4-6. Series Regulated Power Supply

4-37. METER AMPLIFIER.

4-38. With RANGE switch A6S6 (Figure 5-17) in positions up to -30 dBm, signals are allowed to pass through the active filter unattenuated. Above that level, they are attenuated before being applied to the input of the filter. The filtered signal is coupled by transformer A15T2 to the input of a 3-Mc low-pass filter A16L1-L2 (Figure 4-1), then further attenuated in the second section of the RANGE switch, A16S16. After two stages of amplification by A17Q1 and A17Q2, the signal is fed to the front-panel meter M1, and also to output amplifier A21 when MODE switch A18S18 is in the AM position.

4-39. BFO.

4-40. Crystal oscillator A19Q1 provides carrier insertion signal for sideband reception, and also a signal at the tuned frequency for testing purposes. Diodes A19CR1-CR6, in conjunction with MODE switch A18S18, control oscillator functions, and also select the signal fed to output amplifier A21. With MODE in AFC or NORMAL, the oscillator is disabled, and diode A19CR6 is turned on, applying the input signal to the output mixer. In the BFO position, -15 volts is applied to the collector of A19Q1, energizing the oscillator, and A19CR1 and A19CR2 are turned on, grounding the crystal tuning circuits. The diode A19CR5 is turned on, coupling the Oscillator output to the output mixer. In the sideband positions of the MODE switch, A19CR6 is on, allowing the input signal to be applied to the output mixer, and oscillator output is coupled through A17R7 to common-base amplifier A19Q2. Diodes A19CR1-CR4 determine whether capacitor A19C7 tunes the crystal (USB) or whether both A19C7 and A19C6 are used (LSB). For USB, the oscillator is tuned approximately 1450 cycles above 3 Mc. For LSB, the frequency is set approximately 1450 cycles low. In the AM position, the oscillator is de-energized, A19CR6 is turned off, and the rectified signal from A17T1 is coupled through the MODE switch to the input of 1.5-Mc filter A20.

4-41. OUTPUT MIXER.

4-42. In the AFC, NORMAL, and BFO positions of the MODE switch, the local oscillator voltage from transformer A8T2 is applied to the balanced input of the output mixer through amplifier A19Q2-Q3. The mixer transfers the 3-Mc signals to their original frequency, and applies them to 1.5-Mc low-pass filter A20. The filter attenuates high-frequency products of the mixer.

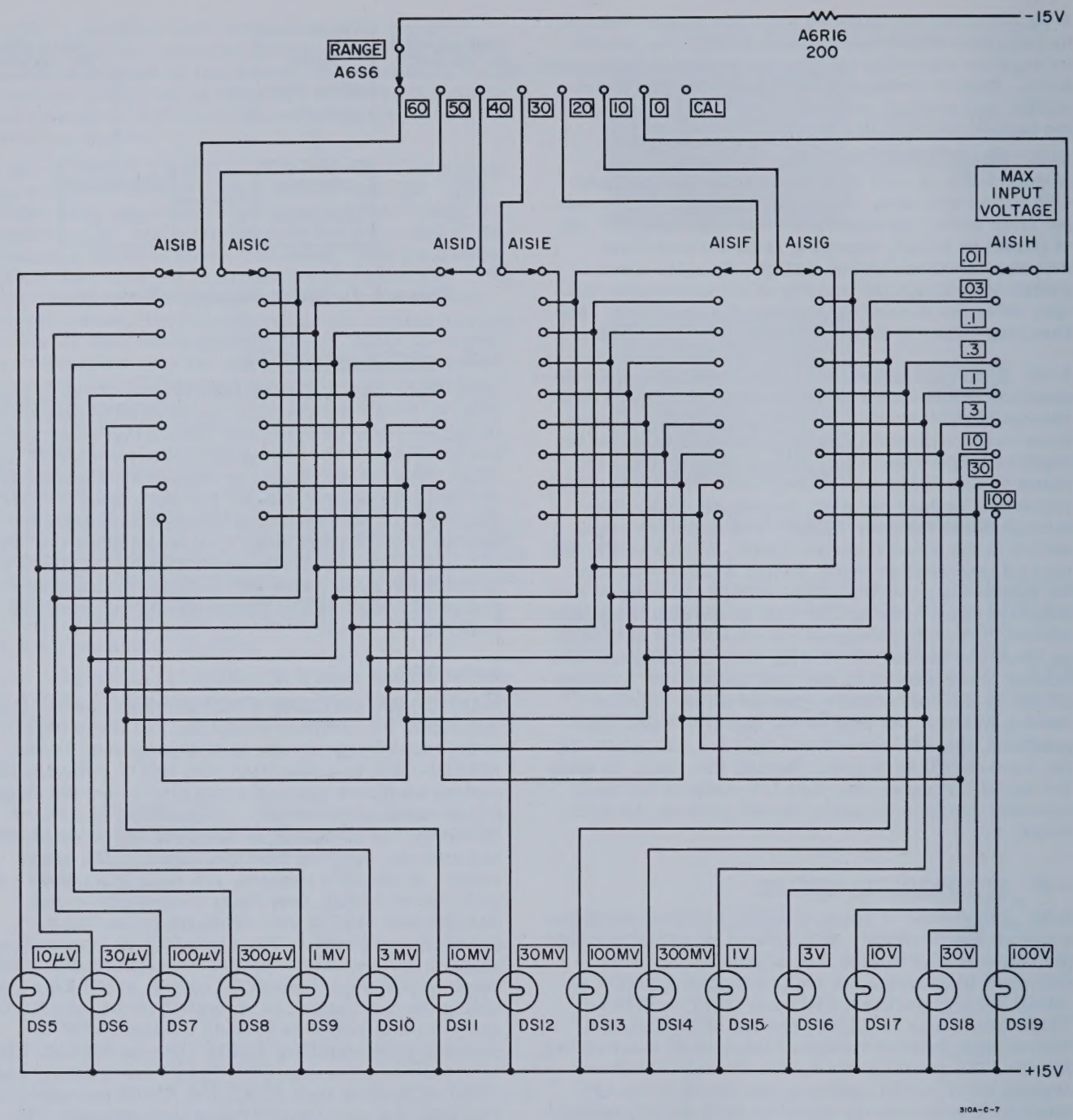

Figure 4-7. Indicator Light Circuit

The signal is finally amplified by output amplifier A21 before being applied to the OUTPUT terminals.

4-43. POWER SUPPLIES.

4-44. There are two regulated power supplies: + 15- and -15-volt. Both supplies are series-regulated types. The series regulator is connected in series with the main load. The output voltage is monitored and compared to a reference voltage. The voltage differential is applied through a control amplifier to the series regulator. This differential voltage changes the effective resistance of the series regulator which in turn holds the output voltage constant (see Figure 4-6).

4-45. The -15-volt supply is series regulated by Q1 and Q2. The output voltage is sampled at A24R7 and compared to the drop across breakdown diode A24CR4 by control amplifier A24Q2. The amplified error voltage is applied to the base of driver A24Q1, which provides low-impedance drive to series regulator Q2. Breakdown diode A24CR3 provides fixed voltage to the base of Q1, making this stage a constant-current device which tends to isolate the second regulator from changes in the output of rectifiers A24CR1 and A24CR2. The on-off switch grounds C14 when the power is turned off. The positive 15-volt supply is essentially the same as the negative supply except for polarity.

4-46. INDICATOR CIRCUIT.

4-47. The front-panel range indicator includes lamps DS5 through DS19, illuminating one of 15 voltage-range windows from 10 μV through 100 V. The circuit is illustrated in Figure 4-7. Wiring to the lights is connected through RANGE switch A6S6 and through MAX INPUT VOLTAGE switch A1S1. Each row of contacts on A1S1 represents a position of A6S6, and each row is connected to the light chain one position in advance of the previous. Thus a one-position change in either switch will result in a one-position change on the indicator panel. When the RANGE switch is at 0 DB, the most sensitive range available is 10 mV. When RANGE is at -60 DB, the least sensitive range is 100V.

WARNING

These servicing instructions are for use by qualified personnel only. To avoid electrical shock, do not perform any servicing other than that contained in the operating instructions unless you are qualified to do so.

Table 5-1. Recommended Test Equipment

Item No.	Instrument Type	Critical Specifications	Model
1	AC Voltmeter	Voltage Range: 0.1 mV to 100 V Voltage Accuracy: ±3% of full scale Frequency Range: 1 kc to 1.5 Mc Impedance: 10 megohms	hp 400F
2	Electronic Counter	Frequency Range: 1 kc to 4.8 Mc Accuracy: ±1 count ± time base accuracy Impedance: 10 megohm Sensitivity: 1.0 mV RMS	hp 5245L with hp 5261A (plug-in) and hp 10003A (Voltage Divider Probe)
3	Audio Oscillator	Frequency: 1 to 600 kc Output: 3 V into 50 ohms Output Level: variable	hp 652A
4	Oscilloscope	Frequency Range: DC to 7.5 Mc Vertical Sensitivity: 0.1-20 V/cm Horizontal Sensitivity: 0.1-2 V/cm Input Impedance: 10 megohm	hp 180C/D 1801A 1820A hp 10001B/D (10:1 voltage Divider Probe)
5	DC Voltmeter/Ohmmeter	Voltage Range: 1 to 35 Vdc Voltage Accuracy: ±3% Ohmmeter Range: 1 ohm to 100 megohm Ohmmeter Accuracy: ±5%	hp 412A
6	Soldering Iron	Wattage Rating: 50 watts Max Tip Temp: 800°F Tip Size: 1/16" to 3/32" Round Tip Diameter: 3/4"	Ungar #665 Handle #885-3/4" Cup Tip #PL333 Tiplet
7	Precision Attenuator	Attenuation: 90 dB in 10 dB steps Accuracy*: ±0.3 dB to 1 kc Frequency Range: dc to 10 kc Impedance: 50 ohms	hp 355B/D
8	Resistors	(1) 5.6k ohm ±10% 0.5W	hp 0687-5621
		(1) 2.7k ohm ±10% 0.5 W	hp 0687-2721
		(2) 18 ohm ± 10% 0.5W	hp 0687-1801
		(1) 135 ohm ±1% 0.5W	hp 0727-0466
9	Tuning Screw ADJ (Non-conducting)	Rod (Bakelite or wood): Approx Diameter 1/4" with a screwdriver-type blade at one end and a thin slot at the other	----
10	Channel Filters	Bandpass: 9 to 50 kc Impedance: 600 ohms Rejection: 30 dB	Allison Laboratories Incorporated Model 2C
		Bandpass: 250 to 672 kc Impedance: 600 ohms Rejection: 30 dB	

* At 10 kc the attenuator must be calibrated to an accuracy of ±0.5% from 0 to -80 dB.

SECTION V
MAINTENANCE

5-1. INTRODUCTION.

5-2. This section provides maintenance and service information for the 310A. The section includes recommended test equipment, performance checks, replacement, repair, adjustment procedures, and troubleshooting charts. If the serial prefix (the first three numbers of the serial number) of your instrument is different than that listed on the title page of this manual, then there are differences between your instrument and the instrument described in this manual (refer to Appendix I).

5-3. TEST EQUIPMENT.

5-4. Table 5-1 lists equipment in number order. Items numbered 1 through 3 are required for performance checks. Items numbered 3 through 6 are required for troubleshooting. Items numbered 1 through 11 are required for adjustment, replacement, and repair procedures. Instruments other than those listed may be used, provided their performance meets the basic requirements listed in Table 5-1.

5-5. PERFORMANCE CHECKS.

5-6. The performance check procedures are used to check the 310A against its specifications. All checks are made from the front panel, thus the instrument panels need not be removed. The procedures are useful as incoming or outgoing quality control, periodic maintenance, or after-repair checks. If the 310A fails any of these checks, refer to Paragraph 5-12 for troubleshooting guides.

5-7. GENERAL CHECK.

a. Check operation of voltage range indicator lamps by switching RANGE and MAX INPUT VOLTAGE controls to all positions except CAL.

b. Check residual meter reading with the 310A set as follows: BFO, -60 DB, 200 cps, 0.01V, and OUTPUT AMPLITUDE fully clockwise. Residual meter reading should be less than 10% of full scale.

c. Check REF ADJUST control with the 310A set to CAL, NORMAL, and RELATIVE. Range of the control should be at least 10 dB.

5-8. SELECTIVITY CHECK.

a. Connect equipment as shown in Figure 5-1.

b. Calibrate 310A (refer to Figure 3-2).

c. Switch MODE to NORMAL and BANDWIDTH to 200. Set oscillator for approximately a 2-volt, 10-kc output signal.

d. Tune 310A FREQUENCY (KC) control for center frequency (see Note, Figure 3-3).

e. Repeat steps c, d, e, and f for the BANDWIDTH settings of 1000 and 3000, respectively. Specifications: The 3 dB points must be within 540 cps of center frequency for BANDWIDTH setting of 1000 and within 1550 cps of center frequency for BANDWIDTH setting of 3000.

f. Increase oscillator frequency until 310A meter reading decreases 3 dB from maximum and record frequency. Decrease oscillator frequency until 310A meter reading decreases 3 dB from maximum record frequency. Specification: The recorded frequency readings must be within 108 cps of the center frequency.

e. Repeat steps c, d, e, and f for the BANDWIDTH settings of 1000 and 3000, respectively. Specifications: For BANDWIDTH settings of 1000, the 3 dB points must be within 540 cps of center frequency for BANDWIDTH setting of 1000 and within 1550 cps of center frequency for BANDWIDTH setting of 3000.

Note

If frequency counter will not trigger then connect to INPUT (in parallel with oscillator).

5-9. BFO AND FREQUENCY CHECK.

a. Connect OUTPUT of 310A to INPUT and setup as follows:

ABSOLUTE-RELATIVE	ABSOLUTE
MAX INPUT VOLTAGE	1
BANDWIDTH	200
MODE	BFO
RANGE	0
FREQUENCY (KC)	0000

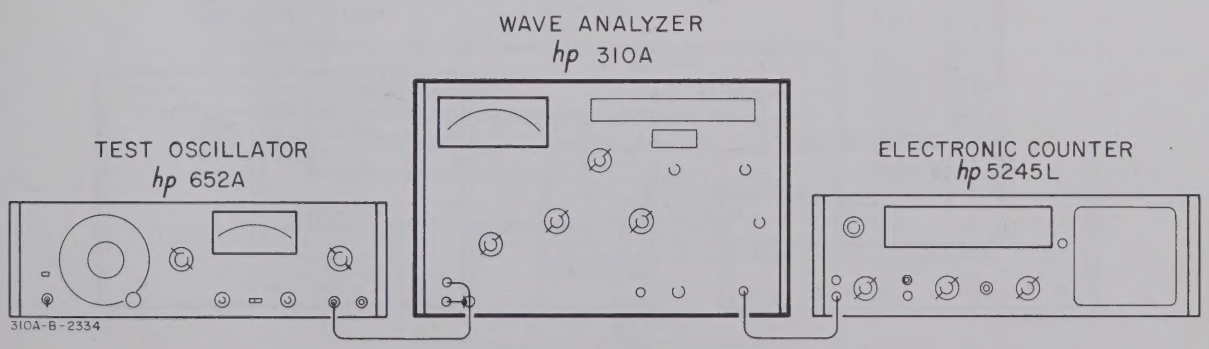

Figure 5-1. Frequency and Sensitivity Check

b. Adjust AMPLITUDE control near full clockwise and adjust ZERO SET to notch at bandpass center.

c. Disconnect INPUT and connect equipment as shown in Figure 5-1 (the audio oscillator is unnecessary).

d. Check frequency dial accuracy by comparing dial settings with counter readings. Specification: Counter readings should be within ±(1% +300 cps). If 310A operation is unsatisfactory refer to Table 5-2.

5-10. AFC DISCRIMINATOR CHECK.

a. Calibrate 310A as shown in Figure 3-2.

b. Connect instruments as shown in Figure 5-1.

Note

Frequency Counter should be connected in parallel with oscillator.

c. Set 310A as follows:

MAX INPUT VOLTAGE	3
RANGE	0
MODE	NORMAL
ABSOLUTE/RELATIVE	RELATIVE

d. Set oscillator for an output signal of about 100 kc and tune 310A to input signal.

e. Adjust REF ADJUST for 2.0 volt and switch MODE to AFC.

f. Increase oscillator frequency slowly so that AFC circuit automatically returns and tracks input signal frequency. The AFC circuit will eventually lose control causing a sudden drop in the meter reading at this point.

g. Repeat steps d and e.

h. Decrease oscillator frequency slowly and record the counter reading at the point that the AFC circuit loses control.

i. The AFC control range or hold-in range should be ±3 kc minimum. If AFC operation is unsatisfactory, refer to Table 5-3.

5-11. VOLTAGE ACCURACY CHECK.

a. Connect equipment as shown in Figure 5-2.

b. Calibrate 310A as shown in Figure 3-2.

c. Set MODE selector to NORMAL.

d. Set ABSOLUTE/RELATIVE switch to ABSOLUTE.

e. FREQUENCY (KC) to 100 kc Oscillator frequency.

f. Switch MODE to AFC.

g. Compare voltmeter readings to 310A meter readings. Specification: Meter readings should be correct to within an accuracy of ±6% of full scale sensitivity.

i. If voltage accuracy is not satisfactory refer to Table 5-2 and 5-3 and check instrument operation.

5-12. GENERAL MAINTENANCE.

5-13. The Model 310A includes 18 etched circuit board assemblies, 5 switch assemblies, a mechanical tuner assembly, a meter movement, and a few component parts mounted on the instrument chassis (refer to Figure 5-3 for assembly locations). For access to all component parts, the Model 310A is equipped with removable top and bottom covers. Removal of the top and bottom covers exposes about three quarters of the component parts of the instrument. The remaining component parts are located beneath additional covers which act as shields.

5-14. TROUBLESHOOTING.

5-15. LOCATING TROUBLE.

5-16. Always start locating trouble with a thorough visual inspection for burned-out or loose components, loose connections, or any conditions which suggest a source of trouble. Check the fuse to see that it is not open.

5-17. If trouble cannot be isolated to a bad component by visual inspection, the trouble should be isolated to a circuit section. Isolation to a circuit section can be accomplished by using the waveforms (located opposite each schematic diagram) and/or using the front panel troubleshooting chart, Table 5-2. Troubleshooting charts, Tables 5-3, 5-4, and 5-5, are additional guides to troubleshooting the power supply and the AFC circuitry.

CAUTION

Be careful when measuring transistor or diode forward or reverse resistance. Almost every ohmmeter has a few ranges that supply enough current or voltage to damage a transistor and some diodes. Always measure ohmmeter open-circuit voltage and short-circuit current on every range that you intend to use. For transistors, ohmmeter open-circuit voltage should not exceed 1.5 volts and short-circuit current should not exceed 3 mA on the ohmmeter range used. For diodes, refer to Table 6-1, Reference Designation Index, which describes diode breakdown and forward bias voltage characteristics.

5-18. TROUBLESHOOTING CHARTS.

5-19. Troubleshooting charts, Tables 5-2 through 5-5,

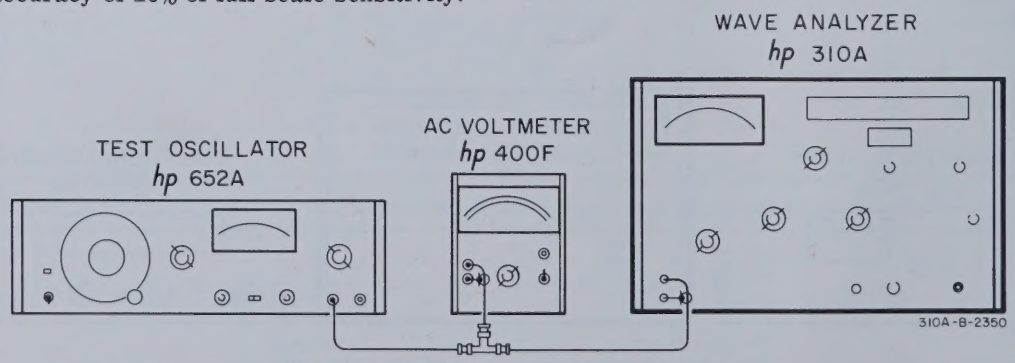

Figure 5-2. Voltage Accuracy Check

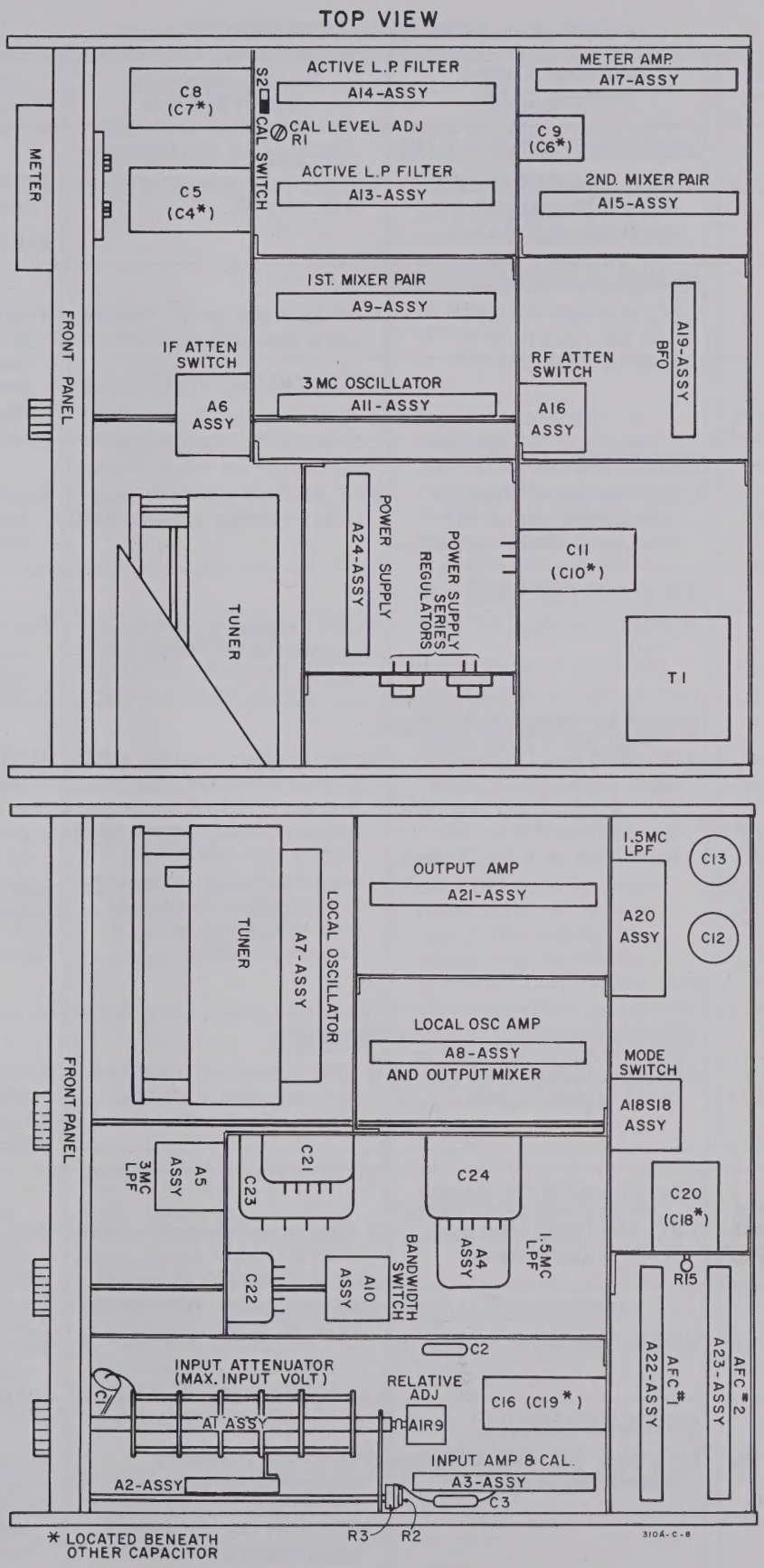

Figure 5-3. Assembly Location

Table 5-2, Front Panel Troubleshooting

Test Equipment and Connections	Important Control Settings (310A)	Indication	Conclusion
- - -	RANGE INDICATOR LAMPS RANGE and MAX INPUT VOLTAGE controls to positions, except CAL	Lamps dim, unlit, or brighter than normal	Power Supply Voltages: low, high, or out Indicator lamp defective
- - -	RESIDUAL METER READING BFO, 200 cps, 0.01V, -60 DB, OUTPUT AMPLITUDE full CW	With no input meter reading more than 20% of full scale	Position of leads on MODE switch (A18S18) causing regeneration, push around and re-check
- - -	REF ADJUST CONTROL CAL, NORMAL, 3000 cps RELATIVE, tuned for maximum meter indication	REF ADJUST does not vary meter reading at least 10dB	Loss of Gain in Input Amplifier A3Q3, A3Q4, or A3Q5
- - -	ZERO SET CONTROL NORMAL, 200 cps, 1V, 0000, -20DB	ZERO SET tunes meter indication to full scale reading	Carrier balance out-of-adjust, (A8 Assembly)
652A and Calibrated 355B/D, connected to INPUT. Input 10 kc signal varied in 10 - dB steps from -60 to -10 dB 739A connected to INPUT. Input 1 Mc signal varied from .003 to 1.0	INPUT ATTENUATOR CHECK AFC, 1000 cps, 1V, tuned to input signal, MAXIMUM INPUT VOLTAGE switch varied from 0.3 to 100 (each step is a 10-dB step).	Meter reading must be set to a near-full-scale reference. For every 10-dB increase in input signal, switch MAX INPUT VOLTAGE switch one step higher. If meter reading error is greater than ±2% of full scale of reference setting	MAX INPUT VOLTAGE switch ground leads touching RANGE switch ground leads touching on switch. Bad resistors in MAX INPUT VOLTAGE switch.
652A and Calibrated 355B/D connected to to INPUT	AFC INPUT AMPLITUDE SENSITIVITY AFC, 1V, ODB, 3000 CPS tuned to input signal	If AFC circuit does not lock on to an input signal amplitude of 0.3 volts	AFC #2 circuit out of adjust A23Q4 defective A23Q5 defective
652A and 5245L/5261A connected to INPUT	AFC FREQUENCY RANGE AFC, 1V, ODB, 1000 cps, tuned to input signal	If AFC circuit does not remain locked to input signal when input frequency is varied at a very slow rate within ±3 kc of tuned frequency	AFC #1 circuit out of adjust AFC #2 circuit out of adjust A23Q4 defective 2nd Mixer Pair (A15) circuit out of adjust
652A connected to INPUT 5245L/5261A connected to OUTPUT	OUTPUT PHASING NORMAL, 3V, ODB, 1000 cps. tuned to input signal	If OUTPUT frequency changes when 310A FREQUENCY (KC) control is varied within selected BANDWIDTH	IF AMPLIFIER (A9) out of adjust 2nd MIXER PAIR (A15) out of adjust

Table 5-2. Front Panel Troubleshooting (Cont'd)

Test Equipment and Connections	Important Control Settings (310A)	Indication	Conclusion
	BANDWIDTH FLATNESS		
	CAL, NORMAL, 1V, ODB	Tune through 100-kc calibrate signal and observe meter indication of peaks to either side of center frequency. If the amplitude of these two peaks is not the same	A9C7 is out of adjustment
	BANDWIDTH SELECTIVITY		
652A and 5245L connected to INPUT	NORMAL, 3V, tuned to 10-kc input signal, check performed for all bandwidths	Vary input frequency to each side of tuned frequency and record 5245L reading when 310A meter reads 3, 50, and 75 dB below original reference. If limits are not within specifications	Trouble location A3 Assembly, A8 Assembly, A9 Assembly, A15 Assembly
	TUNER TRACKING		
652A and 5245L connected to INPUT (1 kc to 600 kc) 739A and 5245L connected to INPUT (600 kc to 1 Mc)	NORMAL, 1000 cps, 3V, tuned to input signal	If FREQUENCY (KC) dial readings do not agree with 5245L Counter readings within ±(1% + 300 cps)	Tuner assembly out of adjust
	DISTORTION		
652A and BANDPASS FILTER (a) with 30dB attenuation at 500 kc, then (b) with 30 dB at 25 kc.	NORMAL, ODB, 200 cps, RELATIVE, tuned to input signal, Meter reference of 0 DB	Tune 310A to second and third harmonic of input signal (for 500-kc input signal tune to second harmonic only). Allow 310A to settle down to each new tuning and assume trouble if harmonics are not less than 80 dB down from reference set at input frequency	UNBALANCE OR DISTORTION in A8 Assembly, A9 Assembly, A3 Assembly, or A15 Assembly
	BFO OUTPUT AMPLITUDE		
AC VOLTMETER connected to OUTPUT	BFO, 1000 cps, 1V, OUTPUT AMPLITUDE fully clockwise	Output level less than at least 1.0V RMS	A19R5 out of adjust A19C17 out of adjust
	RECOVERED FREQUENCY OUTPUT AMPLITUDE		
a. AC VOLTMETER connected to 135-ohm resistor connected across OUTPUT	a. NORMAL, CAL, ABSOLUTE, 3000 cps, OUTPUT AMPLITUDE fully clockwise	a. Output not at least 0.25 V RMS	a. A17R10 out of adjust
b. AC VOLTMETER connected to OUTPUT (135 ohm-resistor removed)	b. LSB, CAL, ABSOLUTE, 3000 cps, OUTPUT AMPLITUDE fully CW, tuned for max meter indication	b. Output not at least 0.53 V RMS	b. A19C6 & C7 out of adjust
c. SAME AS Step b.	c. Same as step b, except MODE to USB	c. Same as step b	c. A19C7 out of adjust

Table 5-3. AFC Troubleshooting

Sympton	Procedure	Indication	Conclusion
AFC will not lock properly. Meter reads about 2/3 normal	1. Check output in NORMAL and AFC.	Output is DSBSC.* Meter sweep in AFC Output DSBSC.* Meter does not sweep	Channel B of Low-Pass Filter is defective Channel A of Low-Pass Filter is defective
AFC will not lock. Meter reads 1 volt in AFC	1. Check dc at Pin 12 of A23	Voltage changes negative Voltage changes positive	Defective A22Q1, A23Q1 short, A22Q4 open, A22Q5 short, A22Q6 short A22Q4 short, A22Q5 open, A22Q1 bad, A22Q6 open, A23Q1 open
AFC will lock on one side only. Meter reads 1 volt.	Check waveform at test point K in AFC	Frequency of rect. waveform sweeps when 310A tuned to one side but not other of input signal	Defective phase switch A23Q2
AFC will not lock. Relay A23K1 chatters in AFC	1. Check operation in NORMAL	Sensitivity reduced in NORMAL. Frequency calibration off	A7CR1 or A7CR2 shorted
AFC will lock on one side only. Meter reading greatly reduced	1. Check for slow meter drift when dial frequency is higher than input frequency	Meter reading will increase until A23K1 energizes. Meter reading will drop and then increase again	A7CR1 or A7CR2 open
AFC will not lock. A23K1 energized continuously	1. Switch to NORMAL	Operation same as in AFC	Defective A22Q2, A23Q4 short, A23Q5 open, A23Q7 short A23K1 short
AFC will not lock. Sensitivity ok.	1. Operation ok in NORMAL	1. In AFC, 310A appears to search.	Defective A22Q1
NOTE: * Double sideband suppressed carrier: Output looks like a full wave signal.			

Table 5-4. -15 Volt Supply Troubleshooting

Symptom	Procedure	Indication	Conclusion
High Output Voltage	1. Disconnect base of Q1	Output drops Output same	Q1 ok Q1 shorted
	2. Reconnect base of Q1. Measure voltage across A24CR3.	Approximately 22.6V. More than approximately 22.6V	A24CR3 ok A24CR3 open
	3. Disconnect base of Q2	Output drops Output same	Q2 ok
	4. Reconnect base Q2. Short emitter to base A24Q1	Output drops Output same	A24Q1 ok A24Q1 shorted
	5. Measure voltage across A24CR4	Approximately 6.8V More than approximately 6.8V	A24CR4 ok A24CR4 open
	6. Adjust A24R7 so base of A24Q2 goes more negative	Output remains high	A24Q2 open

Table 5-4. -15 Volt Supply Troubleshooting (Cont'd)

Sumptom	Procedure	Indication	Conclusion
Low Output Voltage	1. Measure voltage across A24CR3	Approximately 22.6V Less than approximately 22.6V	A24CR3 ok A24CR3 shorted
	2. Parallel A24R1 with 2.7k resistor	Output rises at emitter Q1 Output same as at emitter of Q1	Q1 ok Q1 open
	3. Short emitter to collector A24Q1	Output rises Output same	Q2 ok Q2 open
	4. Parallel A24R2 with 5.6k resistor	Output rises Output same	A24Q1 ok A24Q1 open
	5. Measure voltage across A24CR4	Approximately 6.8V Less than approximately 6.8V	A24CR4 ok A24CR4 shorted
	6. Measure voltage at collector of A24Q2	Approximately 6.8V (same as A24CR4)	A24Q2 shorted

Table 5-5. +15 Volt Supply Troubleshooting

Symptom	Procedure	Indication	Conclusion
High Output Voltage	1. Disconnect base of Q3	Output drops Output same	Q3 ok Q3 shorted
	2. Reconnect base of Q3 Measure voltage across A24CR13	Approximately 22.6V More than approximately 22.6V	A24CR13 ok A24CR13 open
	3. Disconnect base of Q4	Output drops Output same	Q4 ok Q4 shorted
	4. Reconnect base of Q4 Short emitter to base A24Q11	Output drops Output same	A24Q11 ok A24Q11 shorted
	5. Measure voltage across A24CR14	Approximately 6.8V More than approximately 6.8V	A24CR14 ok A24CR14 open
	6. Adjust A24R7 to base of A24Q12 goes more negative	Output remains high	A24Q12 open
Low Output Voltage	1. Measure voltage across A24CR13	Approximately 22.6V Less than approximately 22.6V	A24CR13 ok A24CR13 shorted
	2. Parallel A24R11 with 2.7k resistor	Output at emitter Q3 rises Output at emitter Q3 same	Q3 ok Q3 open
	3. Short emitter to collector A24Q11	Output rises Output same	Q4 ok Q4 open
	4. Parallel A24R12 with 5.6k resistor	Output rises Output same	A24Q11 or A24Q11 open
	5. Measure voltage across A24CR14	Approximately 6.8V Less than approximately 6.8V	A24CR14 ok A24CR14 shorted
	6. Measure voltage at collector of A24Q12	Approximately 6.8V (same as A24CR14)	A24Q12 shorted

Refer to Table 5-6, Page 5-18 for Parts Identification.

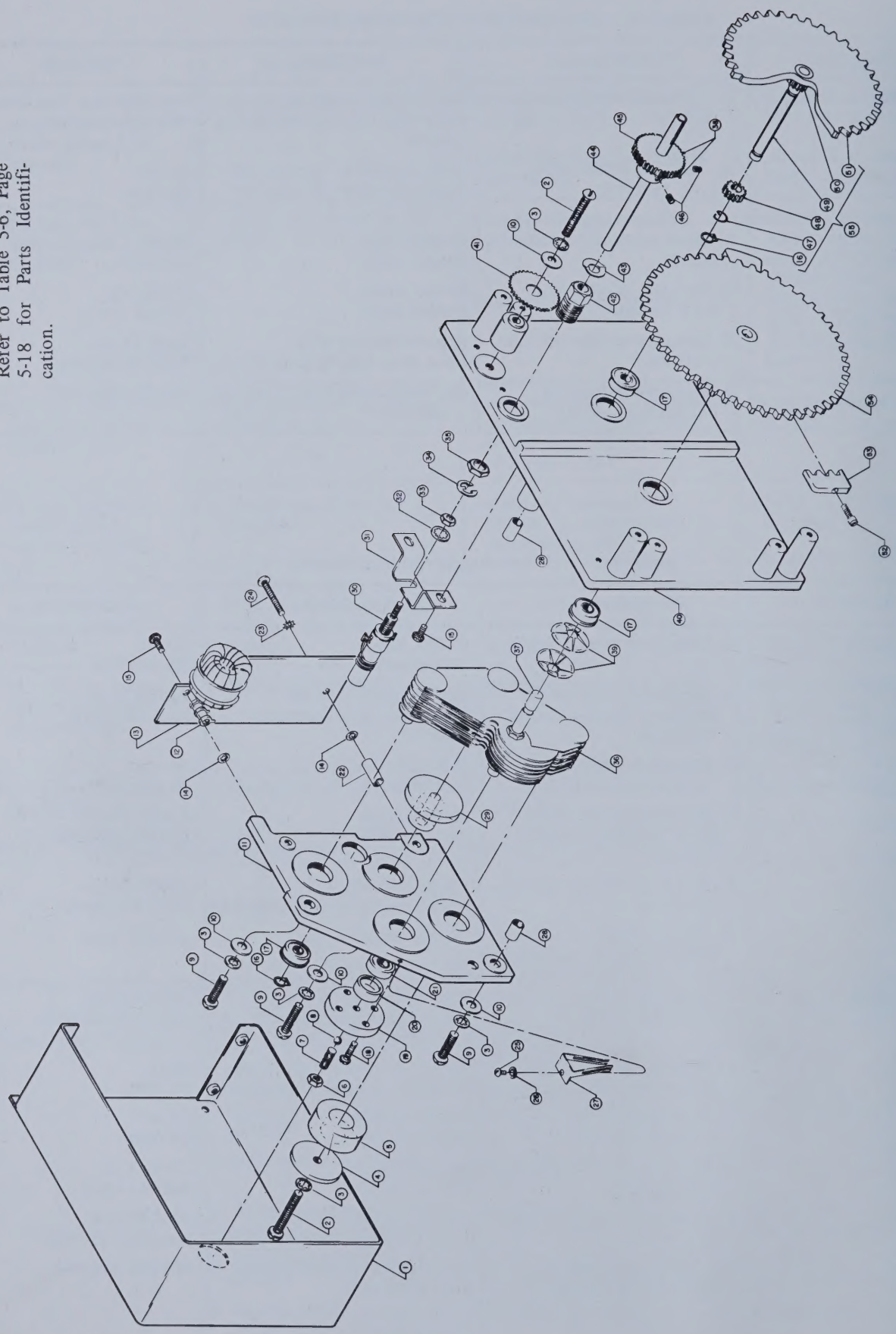

Figure 5-4. Capacitor Tuning Assembly

list symptoms and possible causes of various troubles. For simpification, only major components are referenced in the troubleshooting charts, but it should be remembered that associated components are also failure possibilities. When testing the wave analyzer it is recommended that line voltage be applied through a variable transformer, and that the transformer be adjusted to deliver a voltage at the low end of the rated 103- to 127-volt range (207- to 253-volt for 230-volt operation). An instrument in good condition should operate satisfactorily from any line voltage within the rated range, but where there is marginal operation, weaknesses become easier to trace at low line voltages.

5-20. REPAIR.

5-21. COVER REMOVAL.

5-22. To remove top or bottom cover merely remove the four #6-32 flathead machine screws from the cover and slide back and off instrument. To remove side covers merely remove retaining screws.

5-23. CIRCUIT BOARD REPAIR.

5-24. The Model 310A uses 13 easily removable plug-in circuit boards and 5 non-plug-in circuit boards (note that these 18 boards are outlined on the schematics and the area within the outline is light grey). To remove a plug-in circuit board, grasp the edge opposite the plug-in and pull with a very slight side movement. To remove the non-plug-in circuit boards, remove the retaining screws and unsolder lead connections to the board. The board stock number appears on the board, and the stock number and assembly number (A3, A8, etc.) are silkscreened on the interior metal deck to identify the circuit on a particular board. This assembly number must be added to the component designation (A3R3, A8C1, etc.) when referring to Section VI for parts replacement information.

5-25. The circuit boards used in the Model 310A are etched, plated-through type consisting of a base board and conductor. The conductor material is plated to the wall of the holes, thus the holes are effectively extended through the board. This type of board can be soldered from either side of the board. When working on these boards, use a low heat, small tip, soldering iron and a small diameter rosin core solder. Components may be removed by placing the soldering iron on the component lead on either side of the board, and pulling up on the lead. If the component is obviously damaged or faulty, clip the leads close to the component and then remove the leads. Excessive or prolonged heat can lift the circuit from the board or cause damage to components. The component lead hole should be cleaned before inserting a new lead. To remove components having multiple connections, such as potentiometers, transformers, etc., use a special tip. Refer to Table 5-1 for type of soldering tip required.

5-26. INDICATOR LIGHT REPLACEMENT.

5-27. Individual lights in the front panel illuminated indicator may be easily replaced when defective. With the power switch off, remove instrument top cover and the front panel screws at end of section of lights. This will allow the plate with the numbers and letters to slide up far enough to expose the light bulbs. Using a heavy guage wire, such as lead wire on a large capacitor, push light bulb from center rear of socket until it is loose in socket, then remove and replace.

5-28. TUNING ASSEMBLY REPAIR.

5-29. Under normal operating conditions the tuning assembly should not require maintenance. Shaft bearings are lubricated for the life of the instrument. The following procedures should be followed if replacement of tuning assembly parts becomes necessary. The tuning assembly is three assemblies in one: the LOCAL OSCILLATOR (A7 Assembly) circuit board, the frequency counter drive assembly, and the capacitor tuning assembly. A sketch of the tuning assembly is shown in Figure 5-7. An exploded view of the capacitor tuning assembly and the local oscillator assembly is shown in Figure 5-4. An exploded view of the frequency counter drive assembly is shown in Figure 5-8. Special tool, ⓗⓟ Stock No. 5020-6805 alignment tool, is required for rotor adjustment. In addition, a hand press and plastic-head hammer is required since all bearings (except the ZERO SET shaft) are pressed into casting plates. Tables 5-6 and 5-7 list parts.

5-30. REMOVAL OF ASSEMBLY.

a. Remove bottom, top, and both side covers.

b. Remove LOCAL OSCILLATOR (A7 Assembly) shield cover (see Figure 5-7). Unsolder leads connected to component side of board (yellow, violet, and two shielded, two conductor, leads).

c. Remove all front panel knobs.

d. To remove tuning assembly from instrument, the front panel and right side frame must be partially removed from instrument.

CAUTION

When removing front panel and right side frame, use care not to damage instrument component parts or switch shafts.

e. When right side frame is removed sufficiently from instrument, unscrew the four tuning assembly retaining screws and remove assembly from right side frame.

Note

Before proceeding with further disassembly, determine the necessary steps from inspection of the Tuning Assembly and Figure 5-4 and 5-8.

5-31. ROTOR (STATOR) REPAIR.

a. Refer to Figure 5-4.

b. Disassemble reduction gear shaft (49) from rear casting (11).

c. Disassemble main gear (54) from rotor shaft (37).

d. Disconnect A7-Assembly (13) and clip spring (27) from rear casting (11).

e. Disconnect blue lead from A7-Assembly (13) to insulator stator (4).

f. Remove three round head screws (2) holding rear casting (11) to front casting (40).

g. Tilt tuning assembly with rear casting facing upwards (provide clearance for rotor shaft).

CAUTION

Keep clear of ZERO SET coil (30).

h. Carefully separate rear casting from front casting WITHOUT applying any twisting torque that might damage the stator or rotor.

i. Remove two centering pivots (28).

j. Disassemble the rest of the assembly as necessary, and replace any damaged parts.

k. During reassembly, mount rotor adjusting plate (19), and set rotor centering adjustment screw (7) so that rotor blades clear stator blades while pressing rotor shaft by hand against rotor adjusting plate (19). This is a preliminary adjustment (see Paragraph 5-34).

m. Reassembly is the reverse of disassembly. Rotate rotor fully clockwise and secure rotor position with masking tape across stator blades to prevent damage during reassembly.

5-32. ZERO SET ASSEMBLY REPAIR.

5-33. Zero set coil L1 (30) can be replaced without disengaging the zero set drive. If gears disengage, the proper relationship can be re-established as indicated in step b of Paragraph 5-33.

a. Unsolder white lead and grey lead from coil (refer to Figure 5-5).

b. Turn zero set shaft full clockwise (until stopped by gear stop). Secure this gear position by placing a piece of masking tape across the two gears.

c. Remove E-shaped retaining ring (B).

d. Remove coil bracket from casting.

e. Replace damaged coil.

f. Mount replacement coil in bracket.

Note: Insert coil fully into opening of bracket before tightening locking nut. See Figure 5-5.

g. Turn coil slug until spiral pin extends approximately 1/4 inch from coil bushing.

h. Insert coil shaft into zero set shaft. Spiral pin should clear the brass bushing surface by approximately 1/64 inch, with coil bracket held tightly against casting. If clearance differs greatly from 1/64 inch, turn coil shaft 1/2 turn clockwise or counterclockwise.

i. Mount coil bracket to casting.

j. Insert E-shaped retaining ring (B).

k. Remove masking tape from zero set gear assembly and turn zero set shaft to its counterclockwise stop. While turning zero set shaft, check mechanical alignment of coil shaft. Check correct number of turns between the two mechanical stops (about 11-1/2 turns).

Note

Check that both stops are positively controlled by the gear drive stops and not by the coil slug. If necessary repeat steps g through k.

m. Reconnect white and gray leads to coil as shown in Figure 5-5.

5-34. TUNING ASSEMBLY MECHANICAL ALIGNMENT.

a. Loosen set screws holding main gear to maingear shaft.

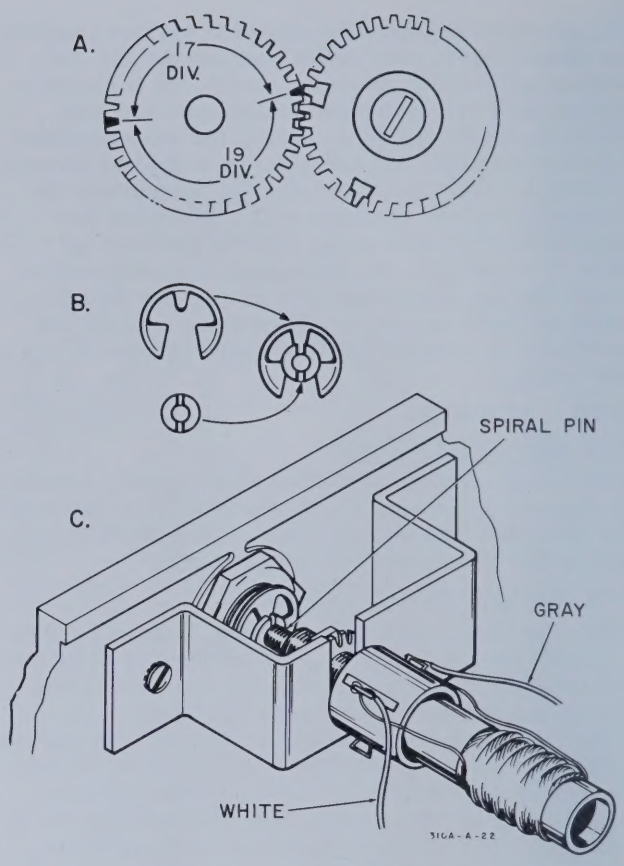

Figure 5-5. Zero Set Assembly

b. Turn gear assembly against clockwise stop. Set frequency counter at 9950 and tighten one set screw in each counter drive miter gear. Next, turn gear assembly against counter-clockwise stop. Counter should now read 1550 +.5, -0. If necessary, reset counter at high end to read 1550 and go back to low end to check for 9950 -.5, +0. reading. When counter has been set correctly, tighten all set screws in miter gears (items number 15 and 12 Figure 5-8).

c. Check alignment of miter gears. The two miter gears must run together as smoothly as possible with a minimum of noise.

d. Set frequency counter to read 1490. Insert alignment tool (hp Stock No. T9138) into the .281-inch-diameter holes of the two castings. Remove tape from rotor and rotate rotor until the flat edge of the plates rests gently against the alignment tool. Refer to Figure 5-6.

e. Holding rotor against tool with counter at 1490, tighten set screws in main gear.

f. Assemble shield (1 - Figure 5-4) to tuner.

5-35. TUNING ASSEMBLY ELECTRICAL TUNING.

5-36. The pre-installation tuning consists of centering the rotor with respect to the stator, adjusting L1 for the correct range of ZERO SET and aligning the assembly for the correct frequency range. Refer to Figure 5-7 throughout procedure.

a. Connect a lead or a short as described to the following points on the circuit board that is part of the tuning assembly:

(1) Connect a lead to point labeled YEL.

(2) Connect a lead to point labeled VIO.

(3) Connect a short between point labeled TO AFC and point beside this point which is labeled with a ground symbol.

(4) Connect a shielded two-conductor coaxial cable, one lead to point labeled OUT and one lead to point beside OUT which is labeled with ground symbol.

b. Place A7 shield cover in place with three leads passing through cover as shown in Figure 5-7.

c. With 310A turned off, make the following clip-lead connections:

(1) YEL lead to yellow lead which normally connects to tuning assembly circuit board.

(2) VIO lead to violet lead which normally connects to circuit board.

(3) Center conductor of shielded lead to shielded lead from pin 14 of A8.

(4) Shield of shielded lead to shield of shielded lead from pin 14 of A8.

d. Connect dc voltmeter positive lead to yellow lead. Connect meter common lead to chassis ground.

e. Connect vertical input of oscilloscope to test point B of A8 with X10 voltage divider probe.

f. Adjust A7C5 to mid-range.

g. Turn 310A on. Oscilloscope presentation should be a sine wave whose peak-to-peak amplitude is approximately 65 to 70 mV.

h. Disconnect X10 voltage divider probe from oscilloscope and connect it to frequency counter. Set frequency dial to 0000.

i. Remove plug button and adjust for maximum counter reading with set screw. TIGHTEN lock nut: frequency counter reading must remain approximately maximum.

j. Replace plug button. Turn L1 adjust from one stop to the other and adjust for mid-frequency reading. This should be about 5-1/2 turns from either stop.

k. Using non-conducting tool with slot in end (refer to item no. 9, Table 5-1), adjust A7L2 for Frequency Counter reading of 3000000 ±100 cps.

m. Turn frequency dial to 1500.

n. Note difference between frequency counter reading and 4500000 cps. If frequency counter reading is high, adjust A7C5 (with non-conducting tool) for a frequency counter reading which is equal to 4500000 -0.8 times (the difference between 4500000 and the frequency counter reading). If the frequency counter reading is low, adjust A7C5 for a frequency counter reading which is equal to 4500000 +0.8 times (the difference between 4500000 and the frequency counter reading).

p. If A7C5 doesn't have enough range, A7C4 must be changed to either an 18, 24, or 27 pf capacitor.

q. If A7C4 had to be changed, allow circuit components 10 to 15 minutes to return to room temperature before proceeding. Then repeat steps e through p before proceeding with this procedure.

r. Return frequency dial to 0000 and adjust A7L2 for a frequency counter reading of 3 Mc ±50 cps.

s. Return frequency dial to 1500. Frequency counter reading should be 4.5 Mc ±15 kc.

t. Check oscillator frequencies at dial settings of 0001, 0010, 0050, 0100, 0150, 0200, 0300, 0500, 0700, 0900, 1100, 1300, and 1500. Specification: Frequency Counter reading must be equal to 3 Mc ±(1% +300 cps) plus dial reading in kilocycles.

u. Corrections for tracking errors can be made at dial settings of 1500 with A7C5. If corrections are made, return frequency dial to 0000 and adjust A7L2 for 3 Mc ±50 cps. Repeat step t.

v. Disconnect X10 probe from frequency counter and connect to oscilloscope. Tune frequency dial from 0000 to 1500 and note peak-to-peak amplitude of oscilloscope waveform. Peak-to-peak amplitude of the waveform should not vary by more than 10%.

w. Check AGC control voltage variation by tuning frequency dial from 0000 to 1500 and noting dc voltmeter reading. The AGC control voltage as measured by the dc voltmeter should not be less than 3.7V or greater than 8 V.

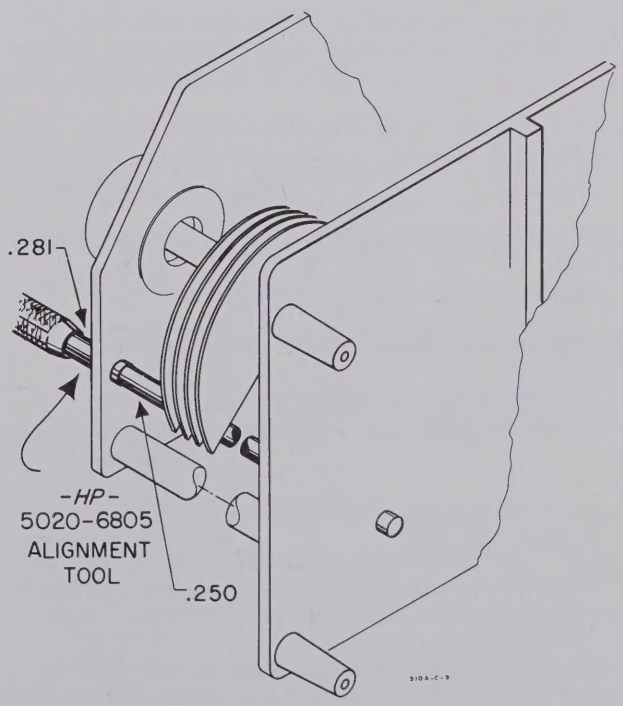

Figure 5-6. Rotor Alignment

5-37. REINSTALLING OF ASSEMBLY.

a. Disconnect all clip lead connections.

b. Fasten assembly to 310A right side frame.

c. Carefully reconnect right side frame and front cover of 310A. Use care not to damage any shafts or instrument parts during re-assembly of instrument.

d. Disconnect leads and the short from component side of the A7 circuit board and connect proper instrument leads to board. Yellow lead to YEL, violet lead to VIO, shielded lead from pin 14 of A8 to OUT and shield to ground point, shielded lead from MODE switch to TO AFC and shield to ground point.

e. Replace front panel knobs.

f. Replace A7 shield cover.

5-38. SWITCH ASSEMBLIES.

5-39. There are five switch assemblies in the 310A:

a. A1 Assembly, Input Attenuator (see Figures 5-9, 5-15 and 5-26);

b. A6 Assembly, IF Attenuator (see Figures 5-10, 5-17 and 5-26);

c. A10 Assembly, Bandwidth Selector (see Figures 5-11, 5-17 and 5-19);

d. A16 Assembly, RF Attenuator (see Figures 5-12 and 5-21);

e. A18 Assembly, Mode Selector (see Figures 5-13 and 5-21). Since the schematic diagrams in this manual fold completely out of the manual, the switch assembly identification pictures and the schematic diagrams are easily compared to the actual instrument switches.

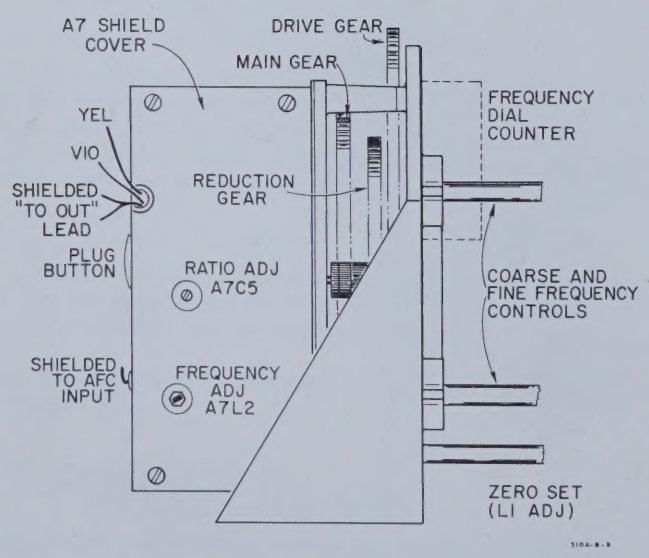

Figure 5-7. Tuning Assembly Adjustment Location

5-40. ADJUSTMENTS.

5-41. POWER SUPPLY ADJUST.

a. Measure the voltage at pin 14 of A21. It should be approximately -22 Vdc. This voltage is not critical and may vary by as much as 2 or 3 volts.

b. Measure dc voltage between pin 12 of A24 and ground. It should be -15 ±0.5 volts. Adjust A24R7 if necessary.

c. Measure voltage between pin 1 of A24 and ground. It should be +15 ±0.5 volts. Adjust A24R17 if necessary. The 15-volt supplies are independent of each other.

5-42. CALIBRATOR CIRCUIT ADJUST.

a. Set RANGE switch to CAL position.

b. Observe the waveform at the collector of A3Q2, using an oscilloscope with a 10:1 divider probe. It should be a square wave with approximately 60/40 symmetry and an amplitude of at least 4.5 volts peak-to-peak.

c. Connect the oscilloscope probe to the positive side of C3 (blue lead to filter A4). Adjust R1, Cal. Level Adj. (located on the deck) for approximately 60 mV peak-to-peak.

5-43. LOCAL OSCILLATOR ADJUST.

a. Refer to Figures 5-3 and 5-7. Remove instrument bottom cover and place instrument on side.

b. Connect voltage divider probe from frequency counter to test point B on A8.

c. Set ZERO SET to its mechanical mid-point. Set FREQUENCY (KC) to 0000.

d. Frequency counter should read 3 Mc ±100 cps. If not, adjust A7L2.

e. Turn FREQUENCY (KC) to 1500. Frequency counter should read 4.5 Mc ±15 kc. If not, adjust A7C5 as follows:

(1) If frequency counter reading is high, adjust A7C5 for a reading which is equal to 4.5 Mc minus (0.8 times frequency counter reading minus 4.5 Mc).

(2) If frequency counter reading is low, adjust A7C5 for a reading which is equal to 4.5 Mc plus (0.8 times 4.5 Mc minus frequency counter reading).

Note

If A7C5 does not have enough range to properly adjust frequency reading, then the value of A7C4 must be changed (suggested values for A7C4 are 18, 24, or 27 pf).

f. If A7C4 is changed, allow circuit to return to room temperature before attempting any further adjustment or measurement.

g. Repeat steps c thru e.

h. Set FREQUENCY (KC) to 0000. Frequency counter must read 3 Mc ±50 cps. If not, adjust A7L2.

i. Return FREQUENCY (KC) to 1500. Frequency counter must read 4.5 Mc ±15 kc. If not, adjust A7C5.

j. Repeat steps h and i until no adjust is necessary.

k. Check oscillator frequencies at FREQUENCY (KC) settings of 0001, 0010, 0050, 0100, 0150, 0200, 0300, 0500, 0750, 0900, 1100, 1300, and 1500. Specification: frequency counter readings must be equal to 3 Mc plus dial reading in kilocycles ±(1% +300 cps).

m. Corrections for errors must be made at dial setting of 1500 with A7C5.

n. Observe the waveform at test point B on A8 with an oscilloscope. The waveform should remain essentially sinusoidal over the tuning range of the instrument.

p. Monitor the voltage at test point B on A8 with a high frequency ac voltmeter. The amplitude should be at least 2.3 volts RMS at 4.5 Mc. The variation in voltage should be less than ±0.3 volts over the frequency range.

5-44. FIRST MIXER PAIR ADJUST.

a. Using a two-channel oscilloscope, connect channel A to A11 test point (TP) F and connect channel B to A11TPG.

b. Set the oscilloscope to External Trigger and connect the External Trigger input to the junction of A11C4 and A11Q3 (collector of A11Q3).

c. Set the oscilloscope vertical sensitivity to 2V/div and adjust A11R4 until a display appears. Then adjust A11C4 and A11C1 for maximum amplitude of both sine wave signals.

d. Adjust A11C13 and A11C19 so that the two signals are equal in amplitude (12.5V p-p) and have a phase difference of 90°, with channel A leading (to the left of) channel B.

e. The adjustments in Steps c and d interact. Repeat these Steps as necessary for proper adjustments.

f. Set the 310A RANGE control to CAL, BANDWIDTH to 3000~, and adjust FREQUENCY for maximum indication on the 310A meter. This should occur at approximately 100 kHz.

g. Remove Assembly A15 from the instrument. (A15 could introduce distortion during the following adjustments.)

CAUTION

Do not ground test point D on either A13 or A14. If this test point comes in contact with ground, A13Q6 or A14Q6 will be destroyed.

h. Set the oscilloscope for an external horizontal sweep input. Connect both channel A and the external horizontal input to A14TPD.

i. Adjust the horizontal sensitivity so that the display is a line 45° from horizontal.

j. Disconnect the horizontal input from A14TPD and connect it to A13TPD.

NOTE

The frequency which results in maximum amplitude in Step f is referred to as the CAL frequency in the following Steps.

k. Adjust the FREQUENCY control slightly below the CAL frequency. Adjust A9C11 and A9C16 for the best circle on the oscilloscope display. (A perfect circle indicates that the two signals are equal in amplitude and 90° out of phase.)

l. Slowly increase the 310A frequency while observing the oscilloscope display. The display should become a dot moving clockwise; then, as the frequency increases to above the CAL frequency, the dot should move counterclockwise. If the dot movement is reversed (counterclockwise below the CAL frequency and clockwise above) the phase adjustment in Steps c and d is incorrect and must be corrected.

m. Adjust the 310A frequency to a point higher than the CAL frequency and note the shape of the circle. If it is noticeably out of round, readjust A9C11 and A9C16 for frequencies above and below CAL frequency for the best compromise.

n. Set BANDWIDTH to 1000~ and 200~ and observe the oscilloscope display. If the circle is distorted on either BANDWIDTH setting, one of the filter capacitors C1 through C24 may be defective.

o. Reinstall A15 assembly.

5-45. SECOND MIXER PAIR ADJUST.

a. Connect the oscilloscope channel A to TP1 and connect channel B to TP2.

b. Set the oscilloxcope for External Trigger and connect the External Trigger input to the junction of A11C4 and A11Q3 (collector of A11Q3).

c. Adjust A15C2 and A15C7 so that the two signals are equal in amplitude and channel A leads (is to the left of) channel B by 90°.

5-46. ACTIVE FILTER MIXER CARRIER BALANCE.

a. Short test points C on A13 and A14 to ground.

b. Set MODE to NORMAL, and RANGE to -60.

c. Alternately adjust A15C3 and A15C8 for a minimum meter indication (less than 2% of full scale). Remove shorts.

5-47. INPUT MIXER CARRIER BALANCE.

a. Set MODE to NORMAL, BANDWIDTH to 3000~, RANGE to give an on-scale indication, FREQUENCY to 0000, ZERO SET for maximum meter indication.

b. Balance the mixer for a minimum reading by alternately adjusting A8C4 and A8R9. Temporarily install the metal shield to insure a correct null when adjusting A8C4. Should be < -20 dB.

5-48. BFO ADJUST.

a. With instrument turned on, set MODE to USB.

b. Connect an oscilloscope voltage divider probe to test point H on A19. Set BFO Level Adj., A19R5 fully counterclockwise.

c. Adjust A19C3 clockwise until oscillation begins, then continue to turn clockwise an additional 1/8 turn. Set MODE switch to LSB and BFO and verify that oscillation occurs in both positions.

d. Disconnect probe from oscilloscope and connect to frequency counter. Monitor the frequency at test point H. Switch MODE to BFO. Note the frequency as f_o.

e. Switch to USB. Adjust A19C7 to (f_o + 1450 cps) ± 50 cps.

f. Switch to LSB. Adjust A19C6 to (f_o -1450 cps) ± 50 cps.

g. Repeat Steps e and f for the proper frequencies.

h. Set MODE to MORNAL and adjust OUTPUT AMPLITUDE fully clockwise.

i. Monitor the 310A output with an oscilloscope and adjust A19C17 for maximum output.

j. Adjust A17R10 for an output of approximately 1.5 V p-p.

k. Set MODE to BFO.

l. Adjust A19R5 for an oscilloscope display of approximately 3 V p-p.

5-49. ACTIVE FILTER OSCILLATOR ADJUST.

a. Connect a frequency counter to the junction of A11Q2 emitter and A11R5.

b. Adjust A11C3 for a frequency of (f_o + 25 Hz) ± 5 Hz (f_o from Paragraph 5-47, Step d).

5-50. OUTPUT.

a. Set RANGE to CAL, MODE to NORMAL, OUTPUT amplitude CW.

b. Connect oscilloscope to OUTPUT.

c. Adjust OUTPUT amplitude for approximately 1.5 V peak-to-peak.

d. Adjust A15R6 and A15C7 for minimum "summing" error as indicated on the oscilloscope. The "summing" error appears as a low frequency "modulation" of the output signal.

e. If the "summing" error cannot be reduced to less than 80 mV p-p, repeat the adjustments in Paragraphs 5-44, 5-45, and 5-50.

5-51. BANDWIDTH FLATNESS.

a. Recheck carrier balance as in Paragraph 5-47.

b. Set RANGE to CAL, MODE to NORMAL, tune the FREQUENCY dial through the 100-kc calibrate signal and observe the response characteristics of the filters as indicated on the front panel meter. Check all three bandwidth positions. Switch to RELATIVE and set REF ADJUST if needed to obtain on-scale meter indications.

c. Adjust symmetry of the bandpass flat top with A9C7.

d. Tune A8C5 for maximum meter reading.

5-52. 3-DB BANDWIDTH CHECKS.

a. Set RANGE to 0 dB, MODE to NORMAL, MAX INPUT VOLTAGE to 10 or 3, BANDWIDTH to 200 cps.

b. Connect oscillator to INPUT. Set oscillator frequency to 10 kc. Monitor on an electronic counter.

c. Turn FREQUENCY dial for maximum indication on 310A meter.

d. Tune oscillator frequency to 10,108 cps, and then to 9,892. Reading should reduce ≥ 3 dB.

e. Set BANDWIDTH to 1000 cps. Tune oscillator frequency ± 550 cps about 10 kc; reading should reduce ≥ 3 dB.

f. Set BANDWIDTH to 3000 cps. Tune oscillator frequency ± 1550 cps about 10 kc; reading should reduce ≥ 3 dB.

5-53. OUTPUT AMPLITUDE ADJUST.

a. Set MODE to BFO and OUTPUT AMPLITUDE fully clockwise.

b. Set RANGE to CAL, BANDWIDTH to 3000 cps, ABSOLUTE-RELATIVE to ABSOLUTE, and tune FREQUENCY (KC) for maximum 310A meter indication. Adjust CAL for meter indication of 1.0.

c. Connect an RF voltmeter, such as the -hp- Model 400 F to the OUTPUT.

d. Adjust A19C17 for maximum output.

e. Set FREQUENCY (KC) to 100 kc and adjust A19R5 for a reading of 1.08 ± 0.02 V rms.

f. Switch MODE to NORMAL. Adjust A17R10 for a reading of 0.54 ± 0.02 on the RF voltmeter.

g. Replace voltmeter with oscilloscope.

h. Tune for maximum 310A meter indication. Switch MODE to USB.

i. The OUTPUT signal should be about 1.5 volts peak-to-peak at a frequency of about 1.5 kc.

j. Switch MODE to LSB. The output should be the same as measured in Step i.

5-54. AFC ADJUSTMENT.

a. Connect an audio oscillator to the 310A INPUT. Adjust oscillator frequency to 10 kHz at an amplitude of 1 V rms.

b. Set 310A MAX INPUT VOLTAGE to IV, MODE to NORMAL, and BANDWIDTH to 1000~.

c. Adjust 310A FREQUENCY for maximum indication on the 310A meter (10 kHz).

d. Connect an oscilloscope to the junction of A22R22 and A22CR9.

e. Set MAX INPUT VOLTAGE to .3 and adjust A22R16 to the point where the peak of the half-wave rectified signal on the oscilloscope is just clipped.

f. Connect oscilloscope to A22TPK and adjust A22R18 for the waveform shown.

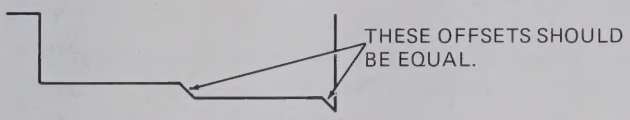

NOTE

It may be necessary to adjust the oscillator frequency slightly above or below 10 kHz to obtain this waveform.

g. Connect counter A22Q1 collector and DC voltmeter to A23 test point L. Tune oscillator down in frequency then back approaching the notch. Counter indication should show a decrease in frequency as notch is approached. Stop when counter reads 55 Hz. Adjust A23R20 for - .50 V ± 0.01 on DC voltmeter.

h. Connect DC voltmeter to A23 pin 12 and switch MODE to AFC. Slowly lower the frequency of the oscillator to a DC voltmeter reading of - 0.5 V and adjust A23R46 until DC voltmeter indication drops. Oscillator should read approximately 6.5 kHz. Switch MODE to NORMAL.

i. Adjust oscillator output level to 1 mV. Set 310A RANGE to - 60 dB, MAX INPUT VOLTAGE to 1 V.

j. Set 310A MODE to AFC and adjust A23R27 until AFC pulls in (310A meter goes to full scale).

5-55. INITIAL INPUT ATTENUATOR ADJUST.

a. Set RANGE to -30dB, BANDWIDTH to 1000 cps, MODE to NORMAL, MAX INPUT VOLTAGE to 0.01, ABSOLUTE-RELATIVE to ABSOLUTE.

b. Connect oscillator for 0.3 millivolts at 1 Mc. Tune FREQUENCY (KC) for maximum 310A meter indication and switch MODE to AFC.

c. Adjust input signal amplitude for 310A meter indication of 0.96.

d. Roughly preset the adjustment of the input attenuator compensating capacitors as indicated below to give the same meter reading on each range as INPUT signal is increased in 10-dB steps.

Max Input Voltage	Freq Resp Set	Capacitor
.01	- - -	No adjustment
.03	.001	A2C1
.1	.003	A2C2
.3	.01	A2C3
1	.03	A2C4
3	.1	A2C5
10	.3	A1C6
30	1	A1C6
100	3	A1C6

e. Connect oscillator to INPUT through precision attenuator, such as ⓗⓟ Model 355B/D, which has been calibrated to an accuracy of ±0.5% from 0 to -80 dB at 10 kc.

f. Set RANGE to -30 dB, BANDWIDTH to 1000 cps, MODE TO NORMAL, and tune FREQUENCY (KC) for maximum meter indication with the MAX INPUT VOLTAGE switch at .01 and the precision attenuator at -80 dB.

g. Switch MODE to AFC and adjust input signal amplitude for 310A meter indication of 0.96.

h. Switch MAX INPUT VOLTAGE from .01 to 100 and as indicated below record + and - variation from 0.96 reference meter reading on each range as attenuation is decreased in 10-dB steps.

Max Input Voltage	Attenuation (dB)	Max Meter Variation 0.99	0.96	0.93
.01	80		0	
.03	70			
.1	60			
.3	50			
1	40			
3	30			
10	20			
30	10			
100	0			

j. If the maximum meter variation exceeds the limits specified (0.99 to 0.93), the most common cause is ground currents flowing in the MAX INPUT VOLTAGE or RANGE switch assemblies. Ground leads on the switch assemblies should not contact on the switch. Check resistor values; a bad resistor will cause attenuation error. Repeat step h and be sure attenuation is correct before proceeding.

j. Set RANGE to 0 dB, MAX INPUT VOLTAGE to 0.3. Set Precision Attenuator to -70 dB and adjust input signal amplitude for 310A meter indication of 0.96.

k. Switch RANGE from 0 to -60 and as indicated below record + and - variation from 0.96 reference meter reading on each range as attenuation is decreased in 10-dB steps.

Range	Attenuation (dB)	Max Meter Variation 0.99	0.96	0.93
0	20		0	
-10	30			
-20	40			
-30	50			
-40	60			
-50	70			
-60	80			

m. If maximum meter variation exceeds the limits specified (0.99 to 0.93), the cause is ground currents flowing in the MAX INPUT VOLTAGE or RANGE switch assemblies or bad resistors. Ground currents are usually caused by contact ON THE SWITCH of ground leads. If excessive error is noted and corrected, repeat entire procedure.

5-56. FINAL INPUT ATTENUATOR ADJUST.

a. Connect oscillator directly to INPUT of 310A.

b. Set oscillator to 10 kc and set 310 as follows:

RANGE to -30 dB, MAX INPUT VOLTAGE to .01 ABSOLUTE-RELATIVE to RELATIVE, MODE to NORMAL, and FREQUENCY (KC) tuned for maximum meter indication.

c. Switch MODE to AFC and adjust amplitude of input signal for 0.96 meter indication. Establish a reference on oscillator meter.

d. Switch MAX INPUT VOLTAGE switch from .01 to 100 and switch oscillator attenuator over same range (the reference set on the oscillator meter must be maintained throughout check). Record 310A meter readings on each step of the MAX INPUT VOLTAGE switch; record 310A meter readings.

e. Set oscillator for 0.3 millivolts at 1 Mc.

f. Set 310A RANGE to -30 dB, BANDWIDTH to 1000 cps, MODE to NORMAL, MAX INPUT VOLTAGE to .01.

g. Tune FREQUENCY (KC) for maximum meter indication and switch MODE to AFC.

h. Adjust input signal amplitude for 310A meter indication of 0.96.

i. Set and maintain the same reference on the oscillator meter as in step c, above.

j. Adjust the capacitors to give the same meter reading on each range except as indicated below.

k. Using the oscillator at 100 kc, repeat steps f through i at frequencies of 100 kc, 400 kc, 600 kc, and 1.5 Mc. Maximum deviation on each range should not exceed ±6%. If error is excessive at any setting, repeat step j and compensate for attenuator errors by changing capacitor settings.

5-57. FINAL CALIBRATOR ADJUSTMENT.

a. Set RANGE to 0 dB, MAX INPUT VOLTAGE to .01, MODE to NORMAL, BANDWIDTH to 1000 ∿, FREQUENCY to 0100.

b. Connect oscillator, tuned to 100 kc, to 310A INPUT. Tune oscillator to obtain indication of 310A. Switch MODE to AFC.

c. Connect AC VTVM to INPUT terminals. Adjust oscillator to obtain 9.6 mV.

d. Adjust 310A CAL to give 9.6 mV.

e. Switch RANGE to CAL and MODE to NORMAL.

f. Adjust A3C4 for maximum 310A reading.

g. Adjust R1 for full scale meter reading (1.0).

Max Input Voltage	Oscillator Settings	Adjust to Step d Reading Plus	Capacitor Adjust
.01	- - -	- - -	No Adjustment
.03	.0001	+.01	A2C1
.1	.0003	+.01	A2C2
.3	.01	+.005	A2C3
1	.03	- - -	A2C4
3	.1	- - -	A2C5
10,	.3	+.02, -.00	A1C6
30	1	+.02, -.00	A1C6
100	3	+.02, -.00	A1C6

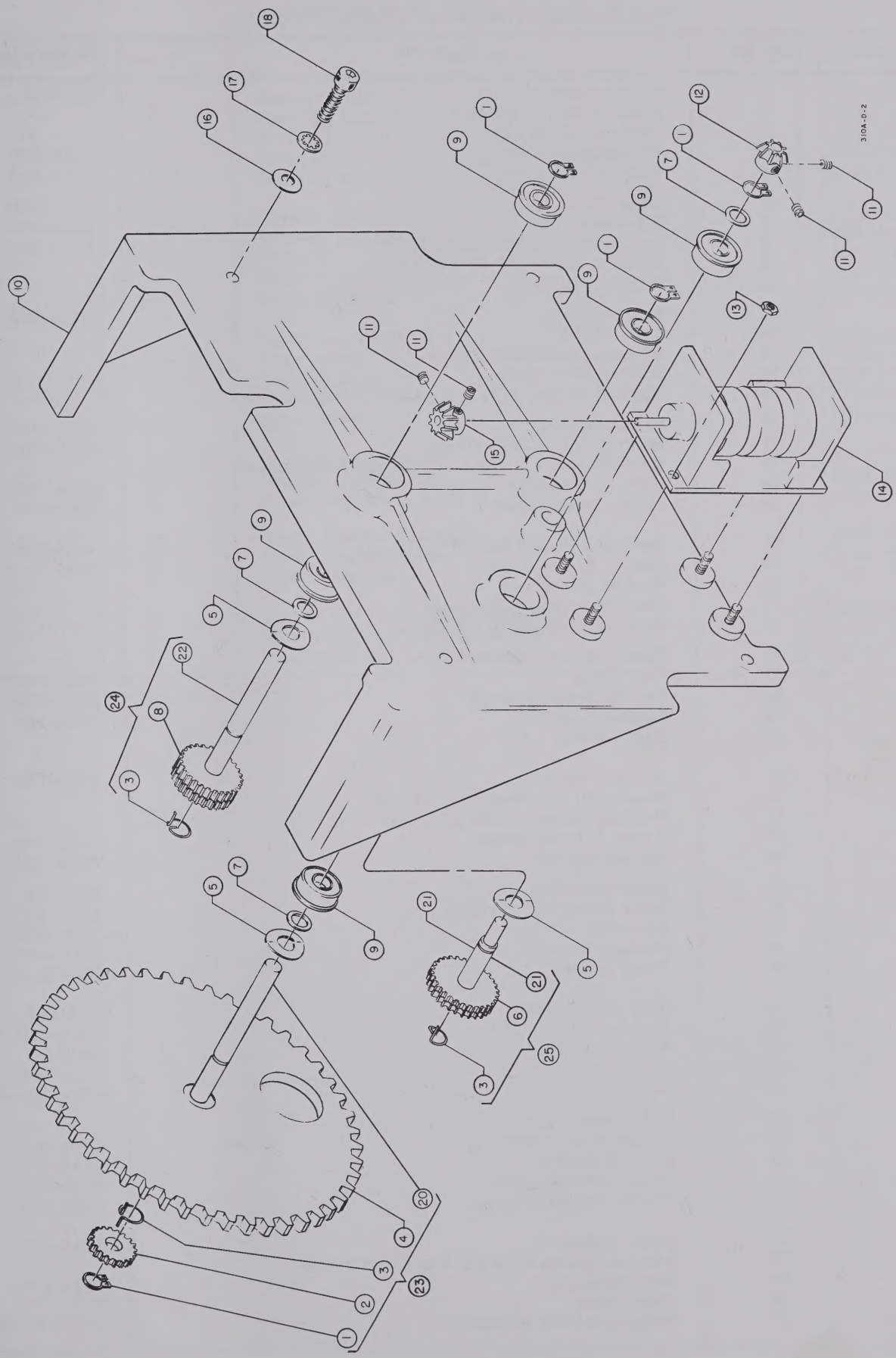

Figure 5-8. Frequency Counter Drive Assembly

Table 5-6. Tuning Assembly Parts Identification

Figure No.	Item No.	Description	hp Stock No.
5-4	1	Shield, capacitor	302-55E
	2	Machine screw, 10-32 x 1-1/4 in	- - -
	3	Washer, #10 int lock	- - -
	4	Washer, stator clamp	302A-88B
	5	Washer, insulating	302A-88A
	6	Lock nut	2950-0032
	7	Set screw	3010-0025
	8	Ball bearing 1/8-in. diameter	1410-0005
	9	Machine screw, 10-32 x 3/4 in.	- - -
	10	Washer, #10 flat	- - -
	11	Rear casting	302A-82A
	12	Coil - A7L2	
	13	A7 Local Oscillator Board	
	14	Washer, #6 int lock	- - -
	15	Machine screw, 6-32 x 3/8 in. (with lock washer)	- - -
	16	Retaining ring	0510-0005
	17	Bearing 1/4-in. (with flange)	1410-0015
	18	Machine screw, G-32 x 1/2 in (with lock washer)	- - -
	19	Plate, rotor adjust	302A-82F
	20	Slider, rotor adjust	302A-82G
	21	Bearing, 1/4-in. diameter	1410-0004
	22	Spacer, 5/8 in length	0380-0010
	23	Washer, #6 ext lock	- - -
	24	Machine screw, 6-32 x 1 in.	- - -
	25	Machine screw, 4-40 x 3/16 in.	- - -
	26	Washer, #4 int lock	- - -
	27	Clip spring	1400-0108
	28	Spacer, 0.484-in. length	0380-0035
	29	Insulator, stator	302A-88E
	30	Zero set coil - L1	
	31	Bracket, zero set	302A-12H
	32	Washer, (1/4-in. diameter) int lock	- - -
	33	Machine screw, 1/4-28 x 3/8 in.	- - -
	34	E ring, 1/4 in-diameter	0510-0083
	35	Hex nut, 1/2-32	0590-0038
	36	Stator assembly	302A-7A
	37	Rotor assembly, variable	310A-7B
	38	Pin drive	1480-0058
	39	Washer, spring	302A-88D
	40	Front casting	302A-L-312
	41	Gear, off set tooth	G-24C-8
	42	Bushing	302A-17D
	43	Washer, spring	M-29A
	44	Shaft, stop gear	310A-32F
	45	Gear, stop	628A-36A-6
	46	Set screw, 8-32 x 3/16 in.	- - -
	47	Spring, gear loading	1460-0054
	48	Gear B, loading	310A-24H
	49	Shaft, reduction gear	310A-37A
	50	Pinion, reduction gear	310A-24A
	51	Gear, reduction	310A-24G
	52	Machine screw, 4-40 x 3/8 in, fillister head	- - -
	53	Stop, main gear	302A-113A
	54	Gear, main	00310-620 *
	55	Reduction Gear Assembly	00310-69501

misprint
00 310-602

Table 5-7. Counter Drive Parts Identification

Figure No.	Item No.	Description	ⓗⓟ Stock No.
5-8	1	Retaining ring	0510-0005
	2	Gear C, loading	310A-24D
	3	Spring, torsion	1460-0105
	4	Gear, drive	310A-24C
	5	Washer, spring	M-29A
	6	Gear D, loading	310A-24F
	7	Washer, #10 flat	3050-0002
	8	Pinion D	310A-24E
	9	Bearing (with flange)	1410-0015
	10	Front plate	310A-20A
	11	Set screw, G-32 x 1/8 in.	3030-0022
	12	Gear, miter	1430-0036
	13	Hex nut, 6-32	2420-0003
	14	Counter	1140-0011
	15	Gear, miter	1430-0037
	16	Washer, #10 flat	3050-0002
	17	Washer, #10 int lock	2190-0011
	18	Screw, cap 10-32 x 3/4 in.	3030-0035
	19	Shaft: Coarse Frequency	310A-37D
	20	Shaft: Counter Drive	310A-37C
	21	Shaft: Vernier	310A-37B
	22	Coarse Frequency Gear Assembly	00310-69502
	23	Fine Frequency Gear Assembly	00310-69503
	24	Counter Driver Gear Assembly	00310-69504

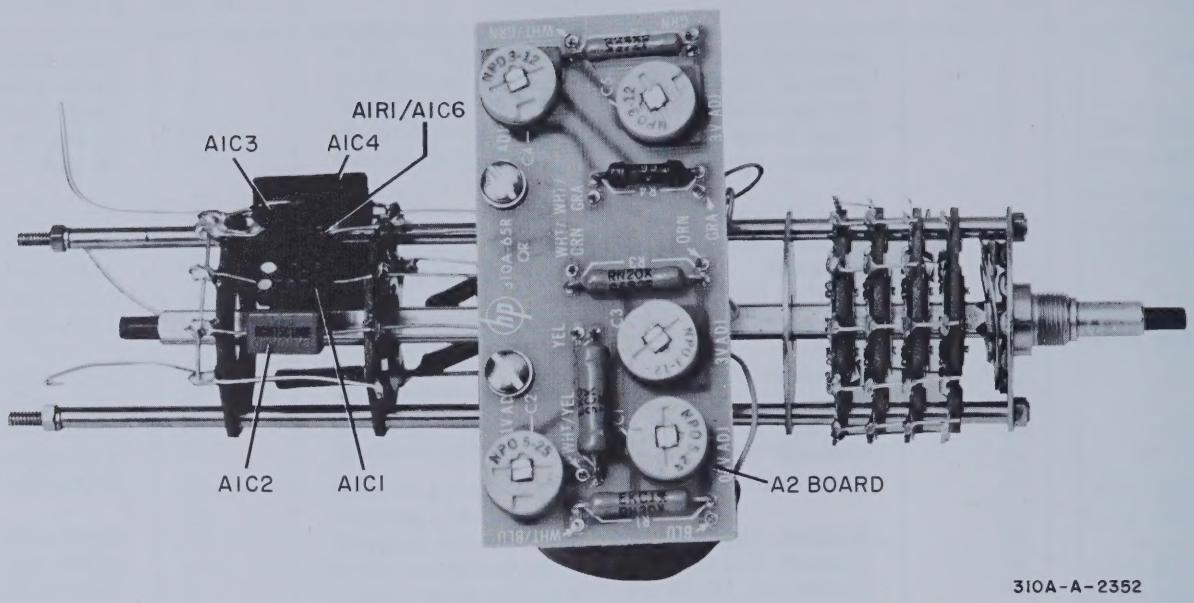

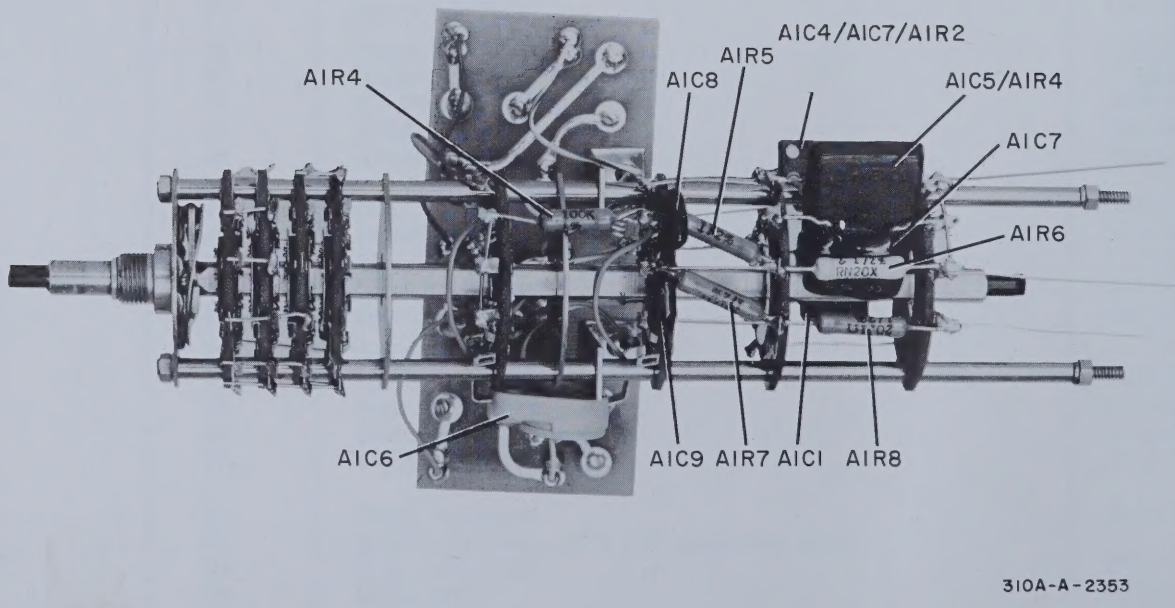

Figure 5-9. Input Attenuator (Max Input Voltage SW)

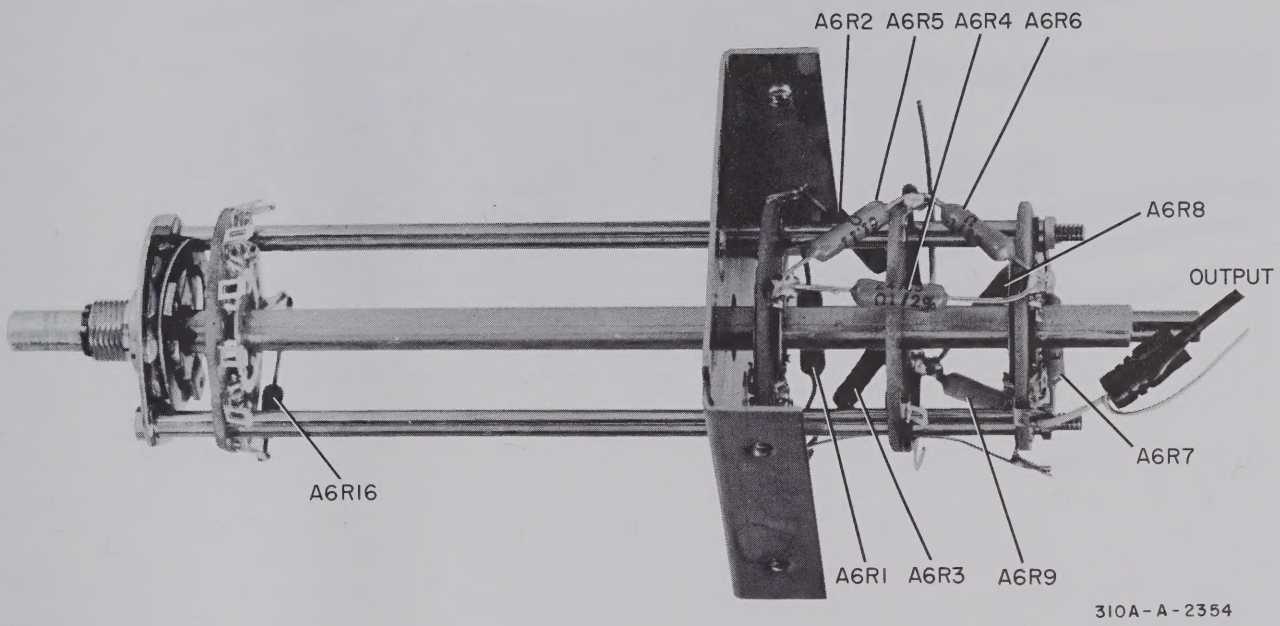

Figure 5-10. IF Attenuator (Half of Range SW)

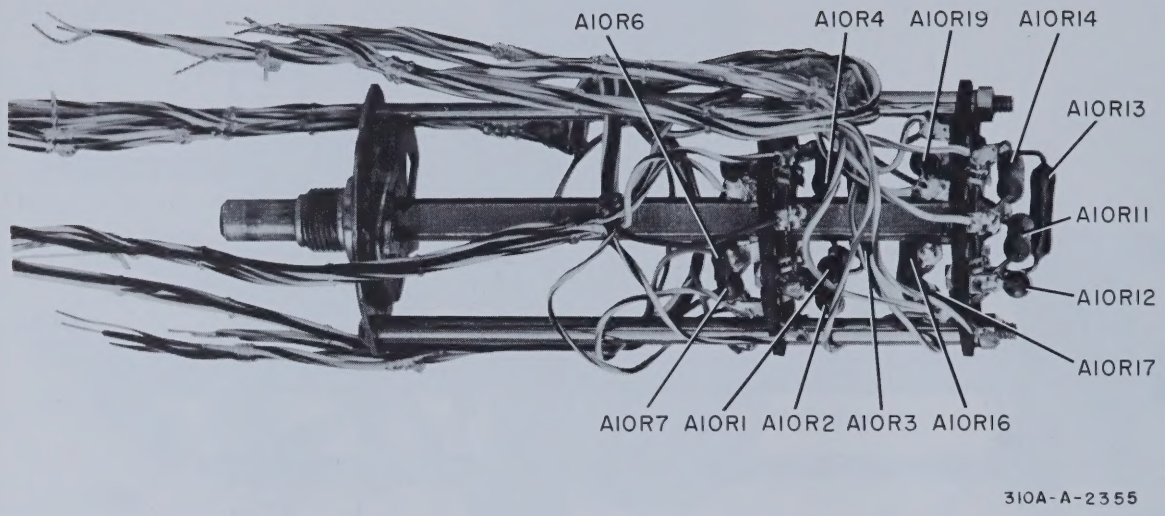

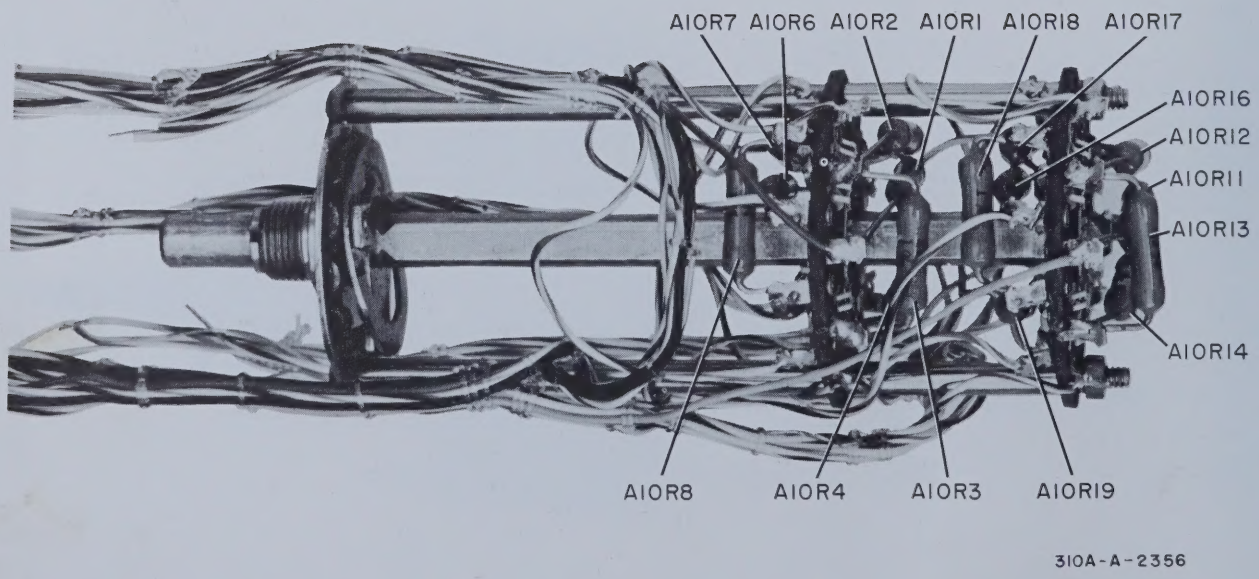

Figure 5-11. Bandwidth Selector (Bandwidth SW)

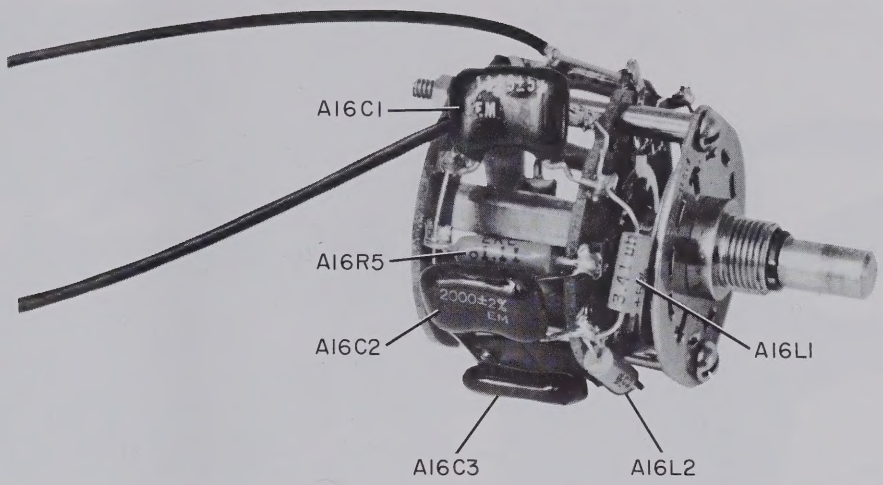

310A-A-2357

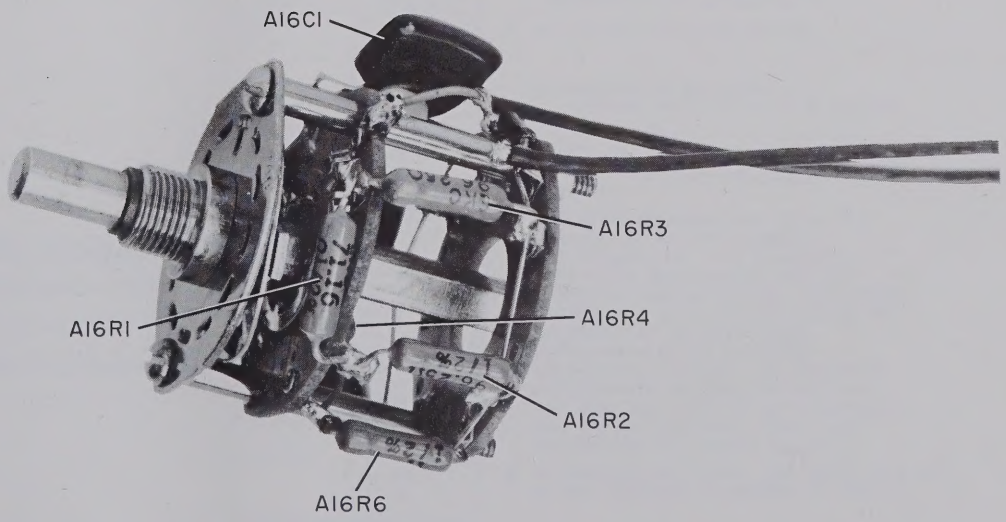

310A-A-2358

Figure 5-12. RF Attenuator (Half of Range SW)

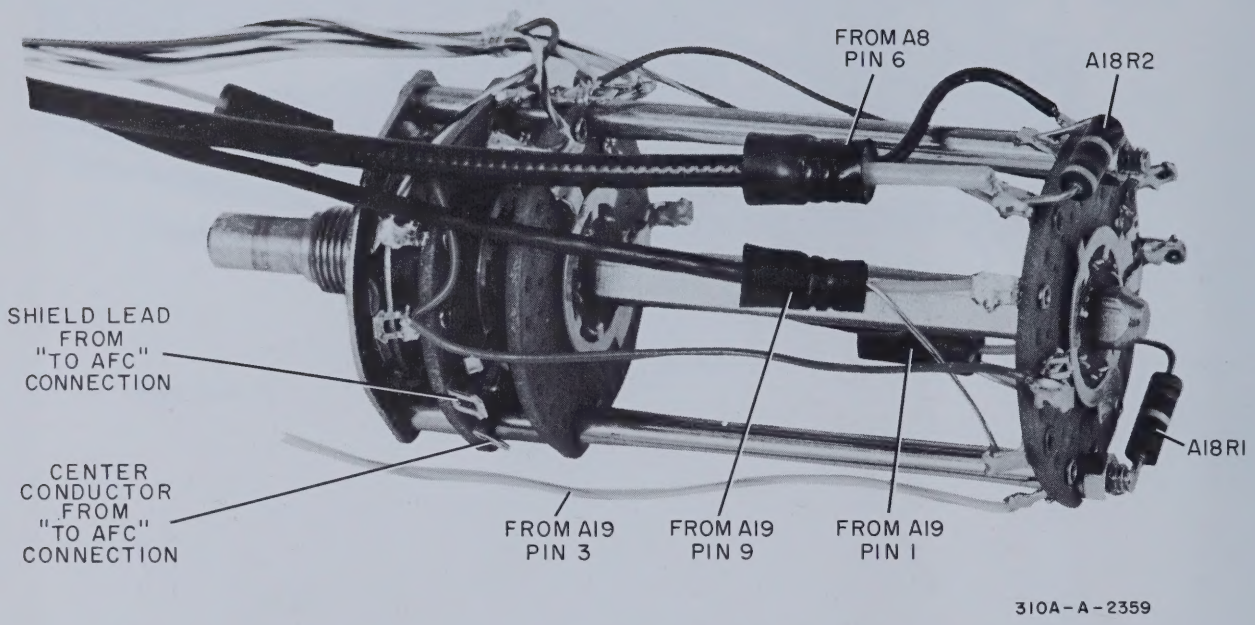

Figure 5-13. Mode Selector (Mode SW)

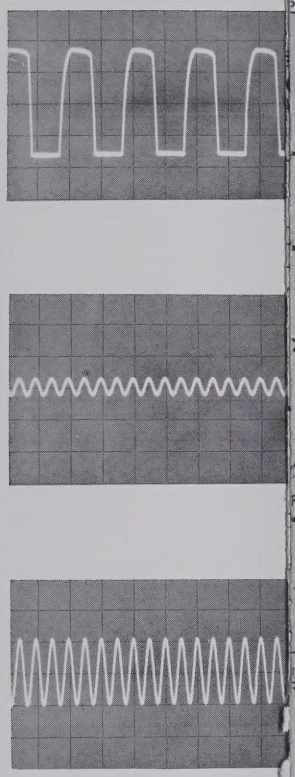

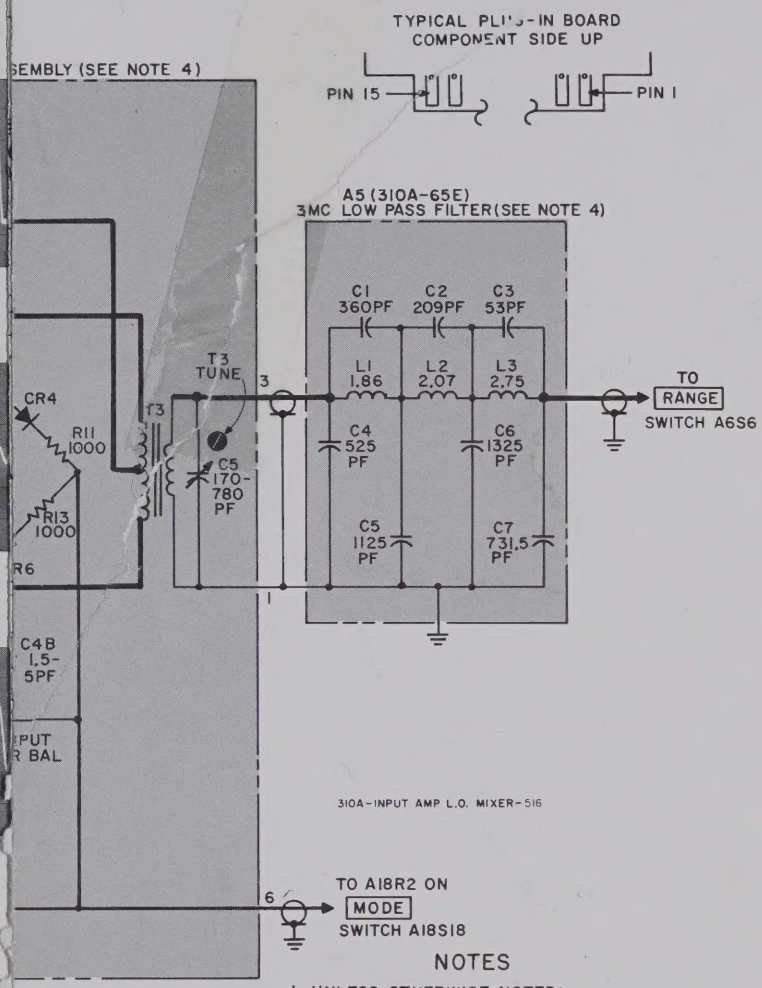

EFERENCE DESIGNATORS
(SEE NOTE 4)

PREFIX	A4-ASSY
-5, A7, A8	C1-7
-3, 17	L1-3
-3	
2,3	
ASSY	A5 ASSY
-C9	C1-7
-R9	L1-3
2- ASSY	A7- ASSY
-5	C1-9
-5	CR1,2
	L1-3
	Q1
	R1-5
	T1
3- ASSY	A8- ASSY
-13	C1-10
R1,2,4,5	CR1-6
-5	L1
-8, H-26	Q1-4
	R1-25
	T1-3

NOTES

1. UNLESS OTHERWISE NOTED:
   RESISTANCE IN OHMS
   CAPACITANCE IN MICROFARADS
   INDUCTANCE IN MICROHENRIES
2. ⏚ = CABINET (CHASSIS) GROUND

   ✳ = AVERAGE VALUE SHOWN
   OPTIMUM VALUE SELECTED AT FACTORY
3. SWITCH S2 IS ACTUATED WHEN [RANGE] SWITCH A6S6 IS IN THE [CAL] POSITION.
4. REFERENCE DESIGNATORS WITHIN AN OUTLINED (——- - -——) ASSEMBLY ARE INCOMPLETE. FOR COMPLETE REFERENCE DESIGNATOR, ADD THE ASSEMBLY NUMBER TO THE DESIGNATOR SHOWN ON THE SCHEMATIC (e.g. R1 ON ASSEMBLY A2 BECOMES A2R1). COMPONENTS ON AN ASSEMBLY CONTAINING A SWITCH ARE IDENTIFIED BY COMPLETE DESIGNATOR (e.g. A1R2 AND A1S1 ARE PART OF A1). COMPONENTS NOT ON AN ASSEMBLY HAVE FULL DESIGNATOR AS SHOWN (e.g. C17).
5. DC VOLTAGES MAY VARY ± 10%. MODEL 310A SET TO (a) CAL., (b) 100KC, (c) NORMAL, (d) 3000 ∿.

MEASUREMENT CONDITIONS:

a. Model 310A set to NORMAL,

b. Model 175A with X10 probe s

c. Model 200S Oscillator set to

Figure 5-14.

Figure 5-15. Input Amplifier, Mixer, and Local Oscillator

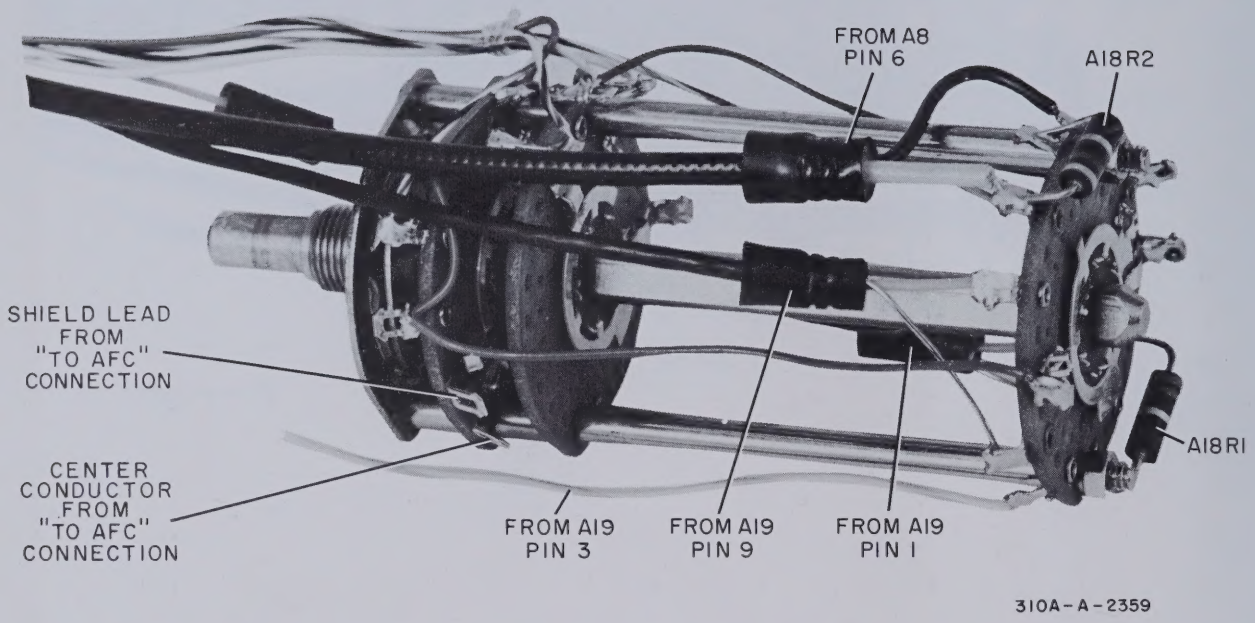

Figure 5-13. Mode Selector (Mode SW)

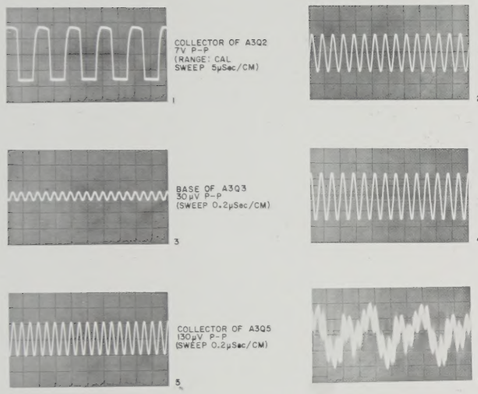

MEASUREMENT CONDITIONS:

a. Model 310A set to NORMAL, 10 kc, 3000 cps, AMPLITUDE cw, 1V, and ODB (CAL for A3Q2 measurement).

b. Model 175A with X10 probe set to 0.1 msec/cm, and appropriate vertical sensitivity.

c. Model 200S Oscillator set to 10 kc and for a 1-volt Model 310A meter reference.

Figure 5-14. Input Amplifier, Local Oscillator and Mixer Waveforms

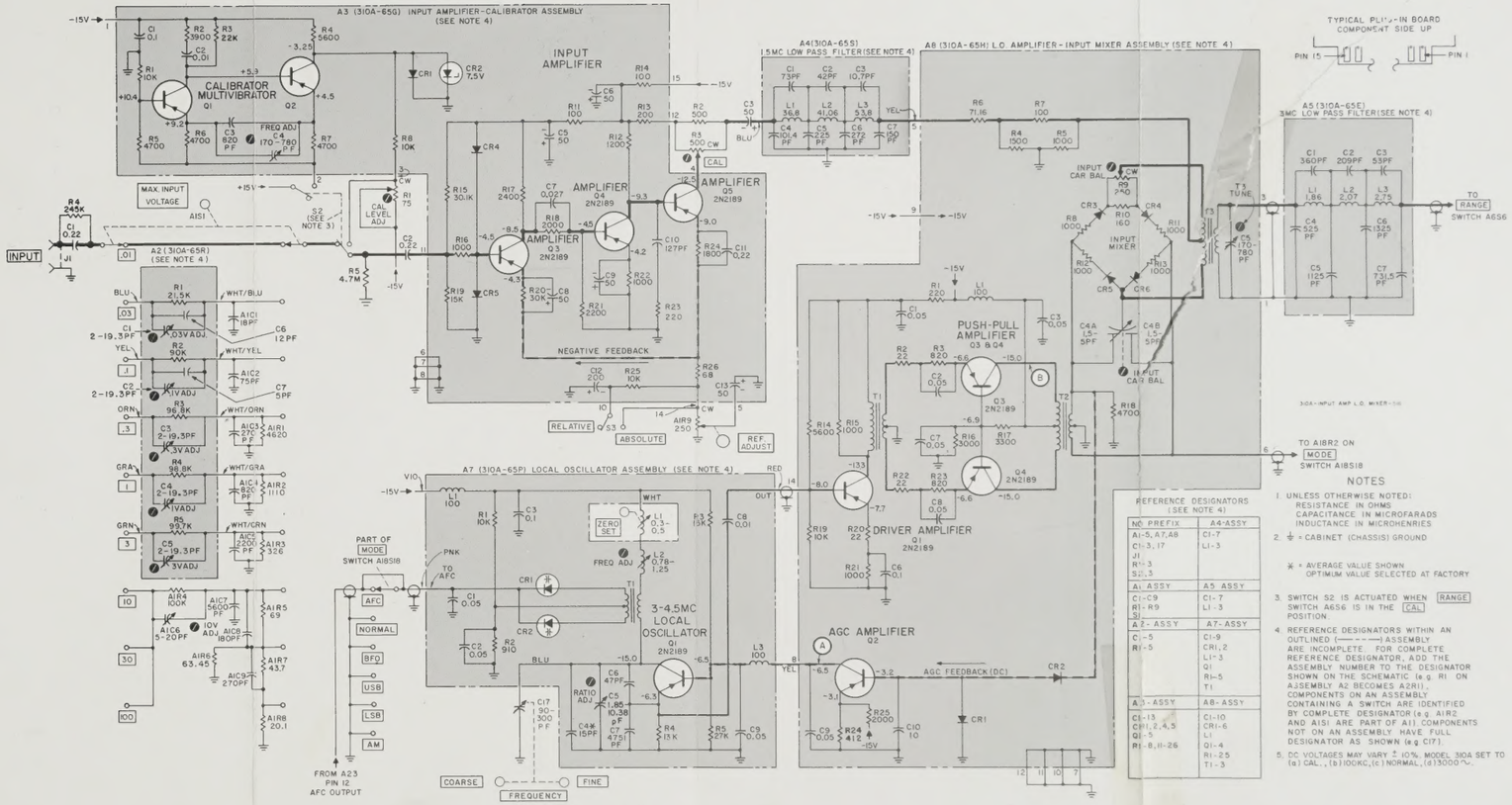

Figure 5-15. Input Amplifier, Mixer, and Local Oscillator

REFERENCE DESIGNATORS
(SEE NOTE)

NO PREFIX	A6 - ASSY	A9 - ASSY	A10 ASSY
A6, A9, A10, A11, A13, A14, A15 C4-9 C21-24	R1-9. S6	C1-7, 11-13 C16-18 CR1-8 L1 -2 Q1-3 R1-11, 15-21, R25-29 T1-4	R1-4, 6-9 R11-14, 16-19 S10
A11 - ASSY	**A13 - ASSY**	**A14 - ASSY**	**A15 - ASSY**
C1-4, 6-9 L1-4 Q1-4 R1-6, 10-14 T1-2 Y1	C1 CR1-2 Q1-6 R1-10, 15-24	C1 CR1-2 Q1-6 R1-10, 15-24	C1-8 CR1-8 L1-2 Q1 R1-6, 10-16 T1-3

MEASUREMENT CONDITIONS:

a. Model 310A set to NORMAL,

b. Model 175A with X10 probe s

c. Model 200S Oscillator set to

Figure 5-16.

Figure 5-17. First Mixer Pair, 3 MC Crystal Oscillator

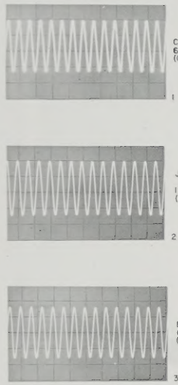

MEASUREMENT CONDITIONS:

a. Model 310A set to NORMAL, 10 kc, 3000 cps, AMPLITUDE cw, 1V, and ODB.

b. Model 175A with X10 probe set to 0.1 msec/cm, and appropriate vertical sensitivity.

c. Model 200S Oscillator set to 10 kc, and for a 1-volt Model 310A meter reference.

Figure 5-16. First Mixer Pair and 3-Mc Crystal Oscillator Waveforms

NOTES:

1. WHEN RANGE SWITCH A6S6 IS IN THE CAL POSITION, SWITCH S2 IS ACTUATED BY A MECHANICAL LINKAGE. A6S6 IS ALSO CONNECTED MECHANICALLY TO A16S16 IN ALL POSITIONS. A6S6 IS SHOWN FULLY CCW.
2. UNLESS OTHERWISE NOTED: RESISTANCE IN OHMS; CAPACITANCE IN MICROFARADS; INDUCTANCE IN MICROHENRIES.
3. CIRCLED LETTERS (e.g. (P)) INDICATE TEST POINTS ON ETCHED CIRCUIT BOARD.
4. ⏚ = CABINET GROUND. ▽ COMMON CONNECTION RETURNED TO A SPECIFIC CABINET GROUND POINT.
5. REFERENCE DESIGNATORS WITHIN AN OUTLINED (— — — —) ASSEMBLY ARE INCOMPLETE. FOR COMPLETE REFERENCE DESIGNATOR, ADD THE ASSEMBLY NUMBER TO THE DESIGNATOR SHOWN ON THE SCHEMATIC (e.g. R5 ON A9 BECOMES A9R5). COMPONENTS ON AN ASSEMBLY CONTAINING A SWITCH ARE IDENTIFIED BY FULL DESIGNATOR (e.g. A6R3 AND A6S1 ARE PART OF A6). COMPONENTS NOT ON AN ASSEMBLY HAVE FULL DESIGNATOR AS SHOWN.
6. DC VOLTAGES MAY VARY ±10%. MODEL 310A SET TO: (a) CAL., (b) 100KC, (c) NORMAL, (d) 3000 ~

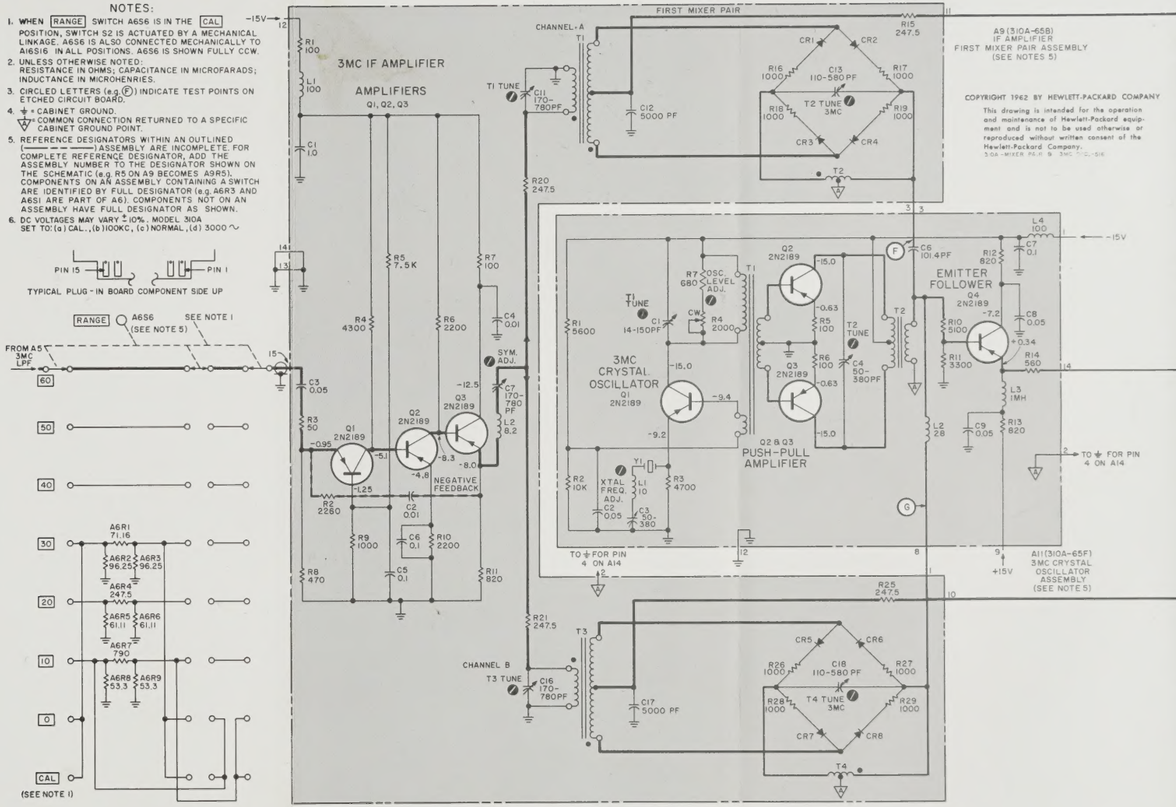

COPYRIGHT 1962 BY HEWLETT-PACKARD COMPANY

This drawing is intended for the operation and maintenance of Hewlett-Packard equipment and is not to be used otherwise or reproduced without written consent of the Hewlett-Packard Company.

310A-MIXER PAIR & 3MC OSC.-S16

REFERENCE DESIGNATORS (SEE NOTE)

NO PREFIX	A6 - ASSY	A9 - ASSY	A10 ASSY
A6, A9, A10, A11, A13, A14, A15 C4-9 C21-24	R1-9. S6	C1-7, 11-13 C16-18 CR1-8 L1-2 Q1-3 R1-11, 15-21, R25-29 T1-4	R1-4, 6-9 R11-14, 16-19 S10
A11 - ASSY	**A13 - ASSY**	**A14 - ASSY**	**A15 - ASSY**
C1-4, 6-9 L1-4 Q1-4 R1-6, 10-14 T1-2 Y1	C1 CR1-2 Q1-6 R1-10, 15-24	C1 CR1-2 Q1-6 R1-10, 15-24	C1-8 CR1-8 L1-2 Q1 R1-6, 10-16 T1-3

Figure 5-17. First Mixer Pair, 3 MC Crystal Oscillator

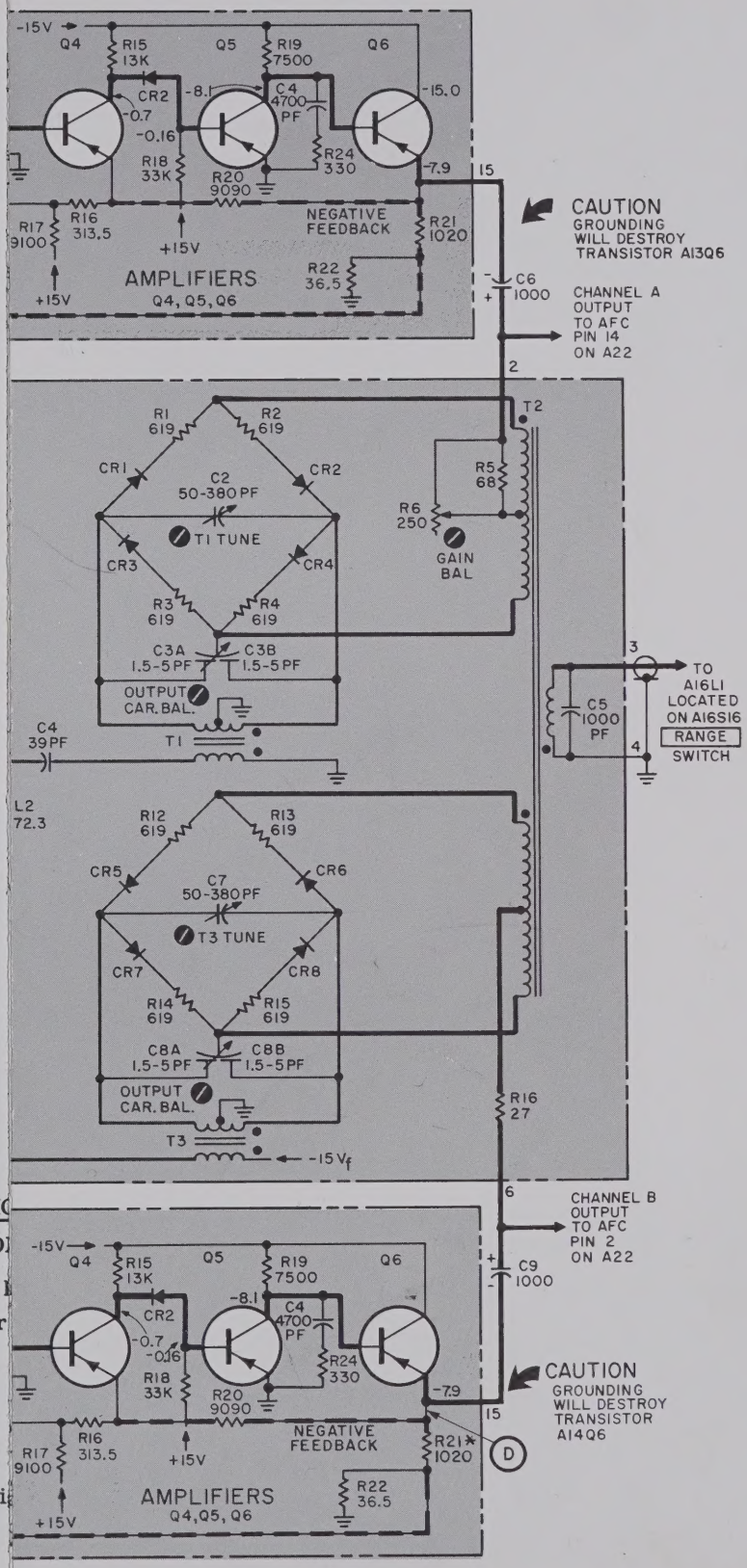

MEASUREMENT CONDITIO

a. Model 310A set to NO

b. Model 175A with X10 p

c. Model 200S Oscillator

Fi

Figure 5-19. Active LPF, Second Mixer Pair

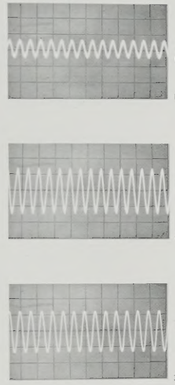

MEASUREMENT CONDITIONS:

a. Model 310A set to NORMAL, 10 kc, 3000 cps, AMPLITUDE cw, 1V, and ODB.

b. Model 175A with X10 probe set to 0.1 msec/cm, and appropriate vertical sensitivity.

c. Model 200S Oscillator set to 10 kc, and for a 1-volt Model 310A meter reference.

Figure 5-18. Active LPF and Second Mixer Pair Waveforms

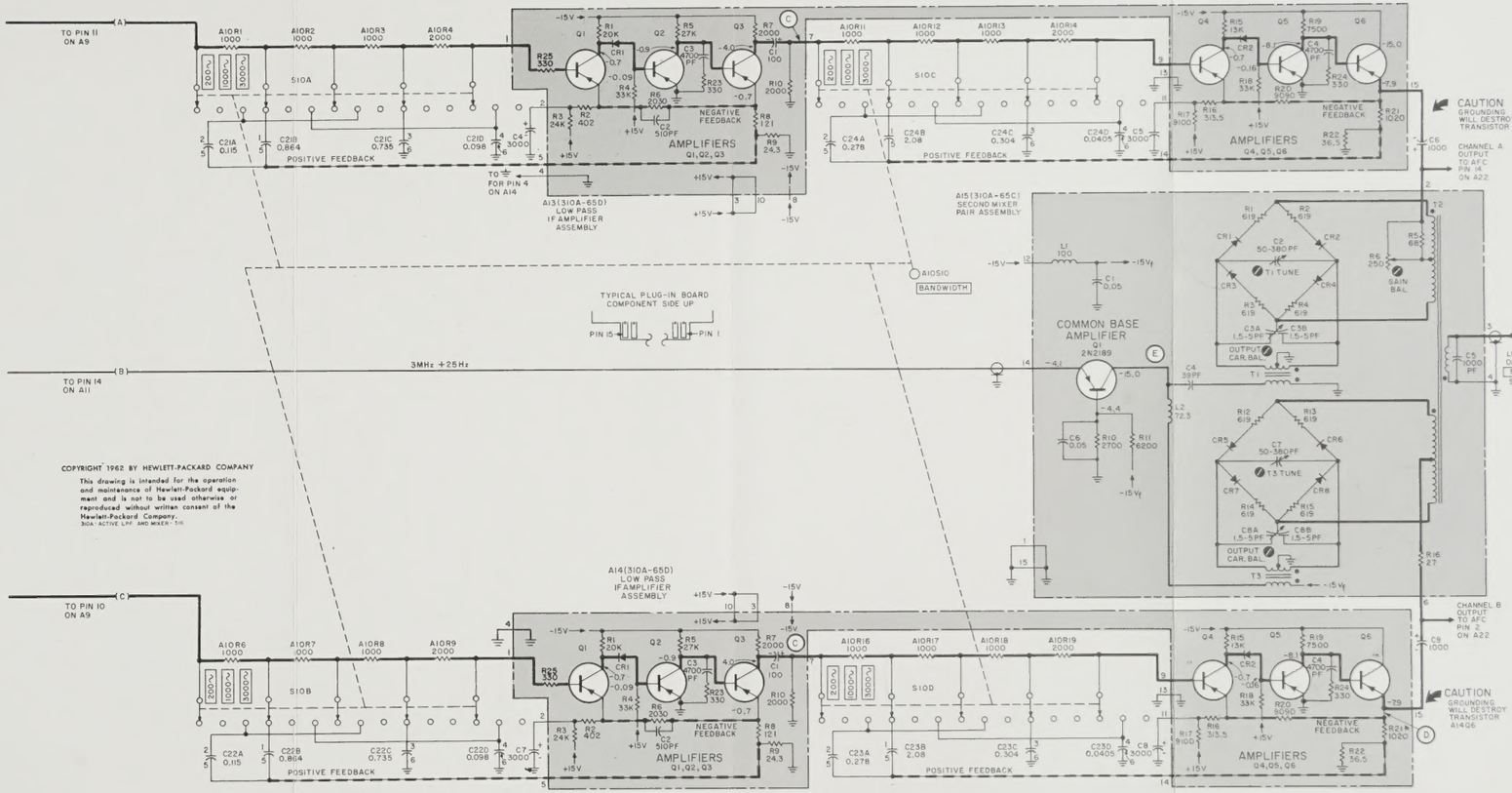

COPYRIGHT 1962 BY HEWLETT-PACKARD COMPANY

This drawing is intended for the operation and maintenance of Hewlett-Packard equipment and is not to be used otherwise or reproduced without written consent of the Hewlett-Packard Company.

310A ACTIVE LPF AND MIXER - 516

Figure 5-19. Active LPF, Second Mixer Pair

5-29/5-30

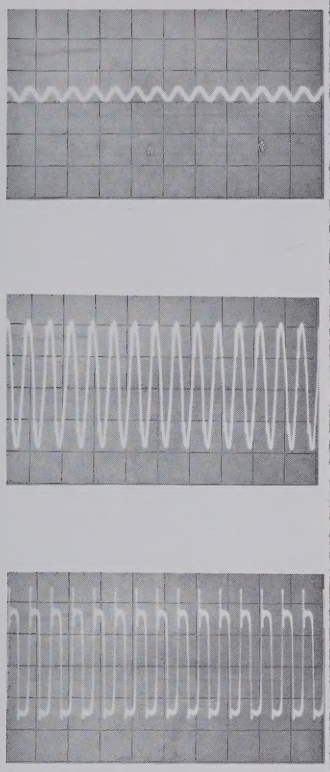

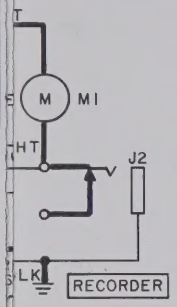

NOTES

1. REFERENCE DESIGNATORS WITHIN AN OUTLINED ASSEMBLY (— — — —) ARE INCOMPLETE. TO FORM COMPLETE DESIGNATOR, ADD THE ASSEMBLY NUMBER TO THE DESIGNATOR SHOWN ON THE SCHEMATIC (e.g. R8 ON A17 BECOMES A17R8). COMPONENTS NOT ON AN ASSEMBLY HAVE FULL DESIGNATOR SHOWN (e.g. M1). COMPONENTS OF AN ASSEMBLY CONTAINING A SWITCH ARE IDENTIFIED BY FULL DESIGNATOR (e.g. A16L2 AND A16S16 ARE PART OF A16).
2. UNLESS OTHERWISE NOTED:
   RESISTANCE IN OHMS,
   CAPACITANCE IN MICROFARADS,
   INDUCTANCE IN MICROHENRIES.
3. ⏚ = CABINET GROUND
   CIRCLED LETTER (e.g. Ⓗ) = TEST POINT.
4. A16S16 IS CONNECTED MECHANICALLY TO A6S6 [RANGE] SWITCH IN ALL POSITIONS. A16S16 IS SHOWN IN FULLY CCW POSITION.
5. DC VOLTAGES MAY VARY ±10%. MODEL 310A SET TO (a) CAL., (b) 100KC, (c) NORMAL, (d) 3000 ∼.

REFERENCE DESIGNATORS (SEE NOTE 1)

NO PREFIX	A16 ASSY	A18 ASSY	A20 ASSY
A16, A17 A18, A19 A20, A21 J2-3 M1 R10	C1-C3 L1-L2 R2-R6 S16	R1-2 S18	C1-7 L1-3
	A17-ASSY	**A19-ASSY**	**A21-ASSY**
	C1-11 CR1-2 L1-3 Q1-3 R1-10, 15-20 T1	C1-8, 11-17 CR1-10 L1-2 Q1-3 R1-8, 11-21 T1-3 Y1	C1-13 CR1-2 Q1-3 R1-10, 14-24

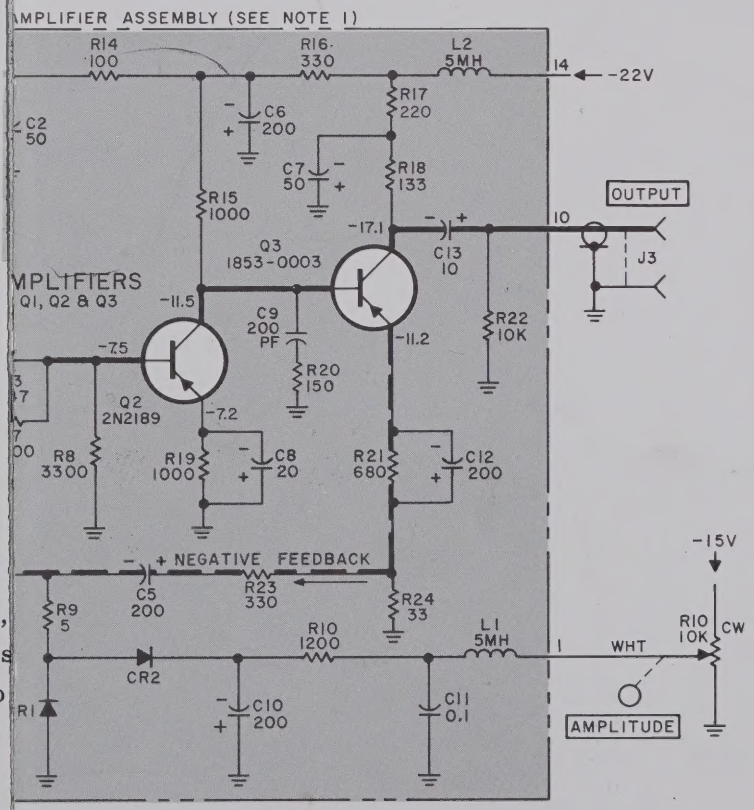

MEASUREMENT CONDITIONS:

a. Model 310A set to NORMAL,

b. Model 175A with X10 probe s

c. Model 200S Oscillator set to

Figure 5-20.

Figure 5-21. Meter, BFO, Restored Frequency Output

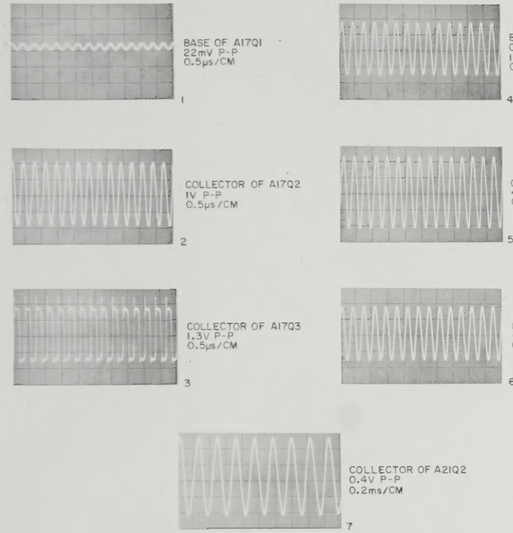

MEASUREMENT CONDITIONS:

a. Model 310A set to NORMAL, 10 kc, 3000 cps, AMPLITUDE cw, 1V, and ODB.

b. Model 175A with X10 probe set to 0.1 msec/cm, and appropriate vertical sensitivity.

c. Model 200S Oscillator set to 10 kc, and for a 1-volt Model 310A meter reference.

Figure 5-20. Meter, BFO, and Restored Frequency Output Waveforms

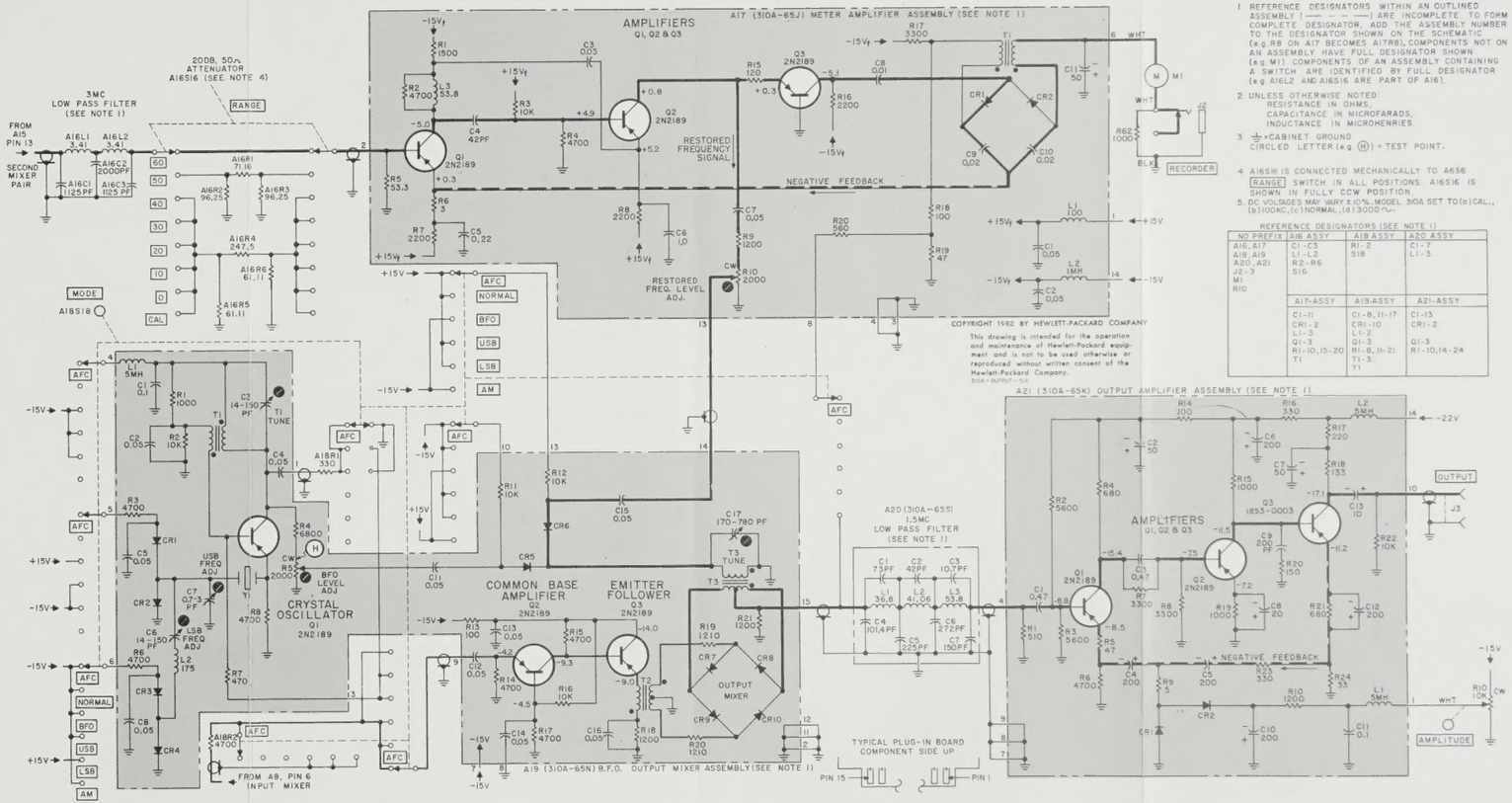

Figure 5-21. Meter, BFO, Restored Frequency Output

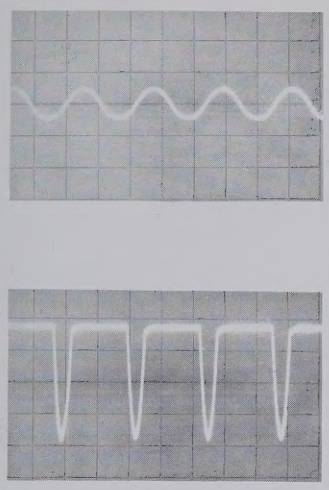

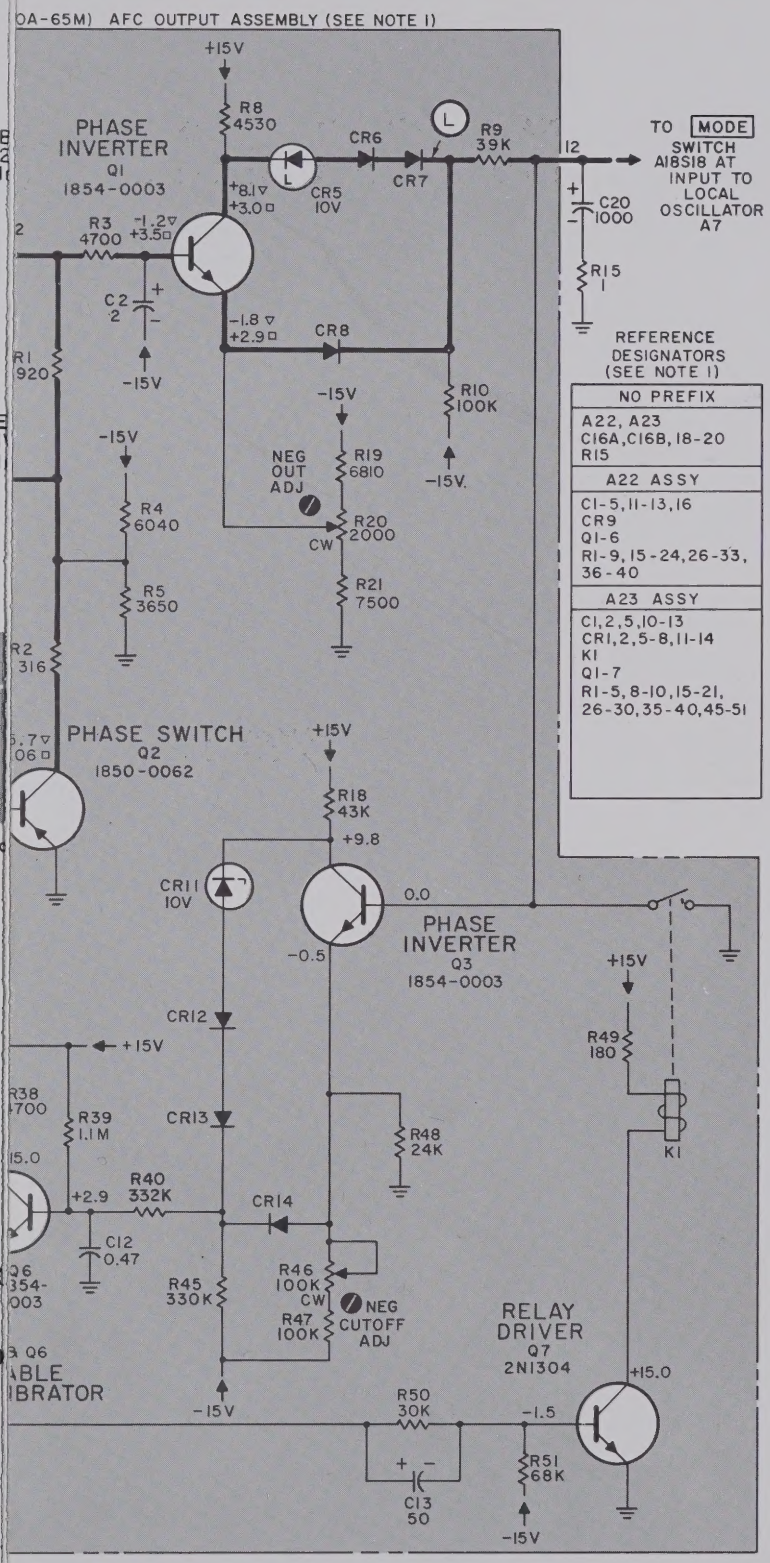

MEASUREMENT CONDITIONS:

a. Model 310A set to NORMAL, 1

b. Model 175A with X10 probe set

c. Model 200S Oscillator set to 10

Figure 5

Figure 5-23. Automatic Frequency Control

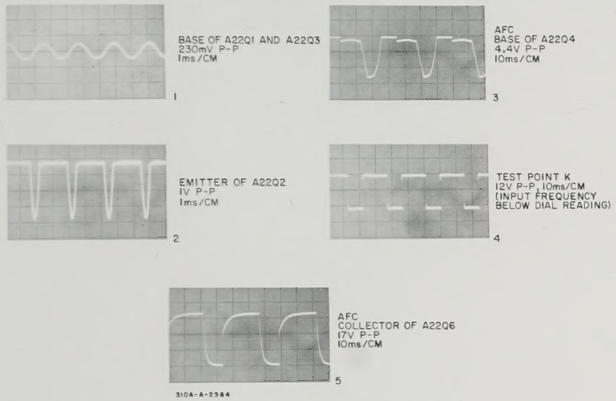

MEASUREMENT CONDITIONS:

a. Model 310A set to NORMAL, 10 kc, 3000 cps, AMPLITUDE cw, 1V, and ODB.

b. Model 175A with X10 probe set to 0.1 msec/cm, and appropriate vertical sensitivity.

c. Model 200S Oscillator set to 10 kc, and for a 1-volt Model 310A meter reference.

Figure 5-22. Automatic Frequency Control Waveforms

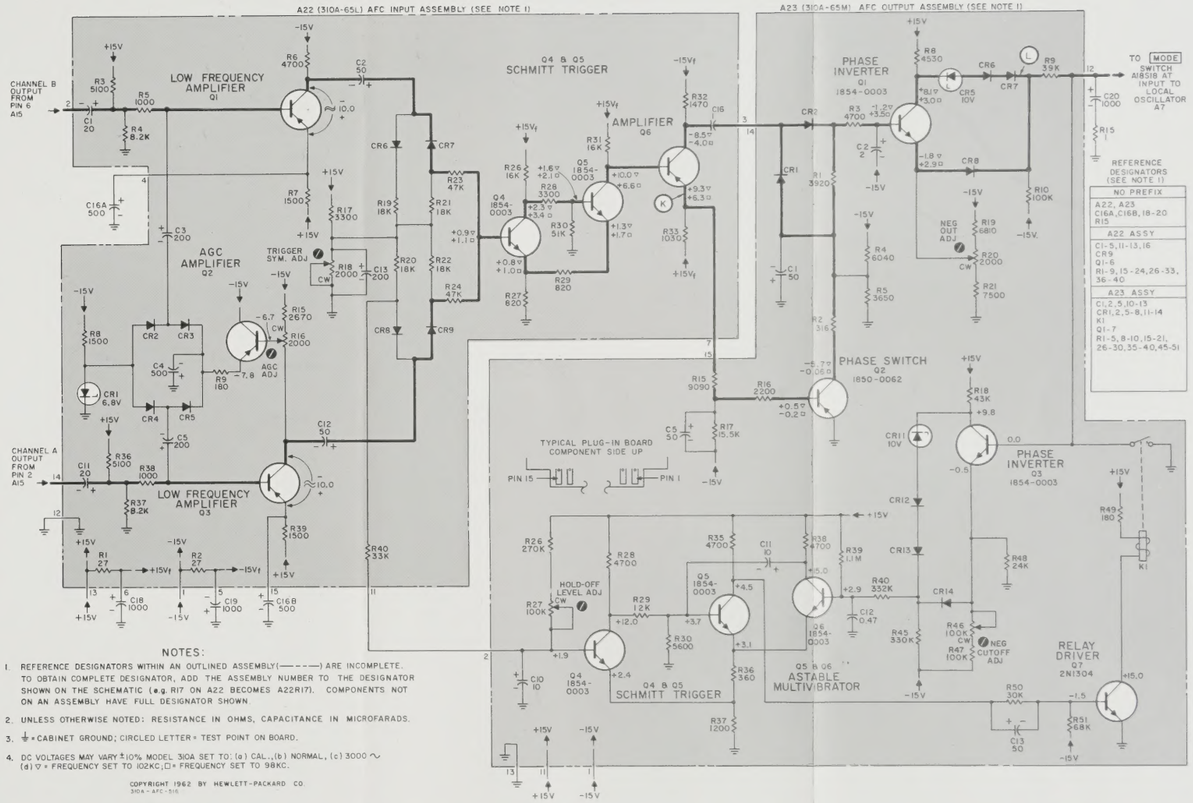

NOTES:

1. REFERENCE DESIGNATORS WITHIN AN OUTLINED ASSEMBLY(— — — —) ARE INCOMPLETE. TO OBTAIN COMPLETE DESIGNATOR, ADD THE ASSEMBLY NUMBER TO THE DESIGNATOR SHOWN ON THE SCHEMATIC (e.g. R17 ON A22 BECOMES A22R17). COMPONENTS NOT ON AN ASSEMBLY HAVE FULL DESIGNATOR SHOWN.
2. UNLESS OTHERWISE NOTED: RESISTANCE IN OHMS, CAPACITANCE IN MICROFARADS.
3. ⏚ = CABINET GROUND; CIRCLED LETTER = TEST POINT ON BOARD.
4. DC VOLTAGES MAY VARY ±10% MODEL 310A SET TO: (a) CAL., (b) NORMAL, (c) 3000 ~ (d) ○ = FREQUENCY SET TO 102KC; □ = FREQUENCY SET TO 98KC.

COPYRIGHT 1962 BY HEWLETT-PACKARD CO.
310A-AFC-516

Figure 5-23. Automatic Frequency Control

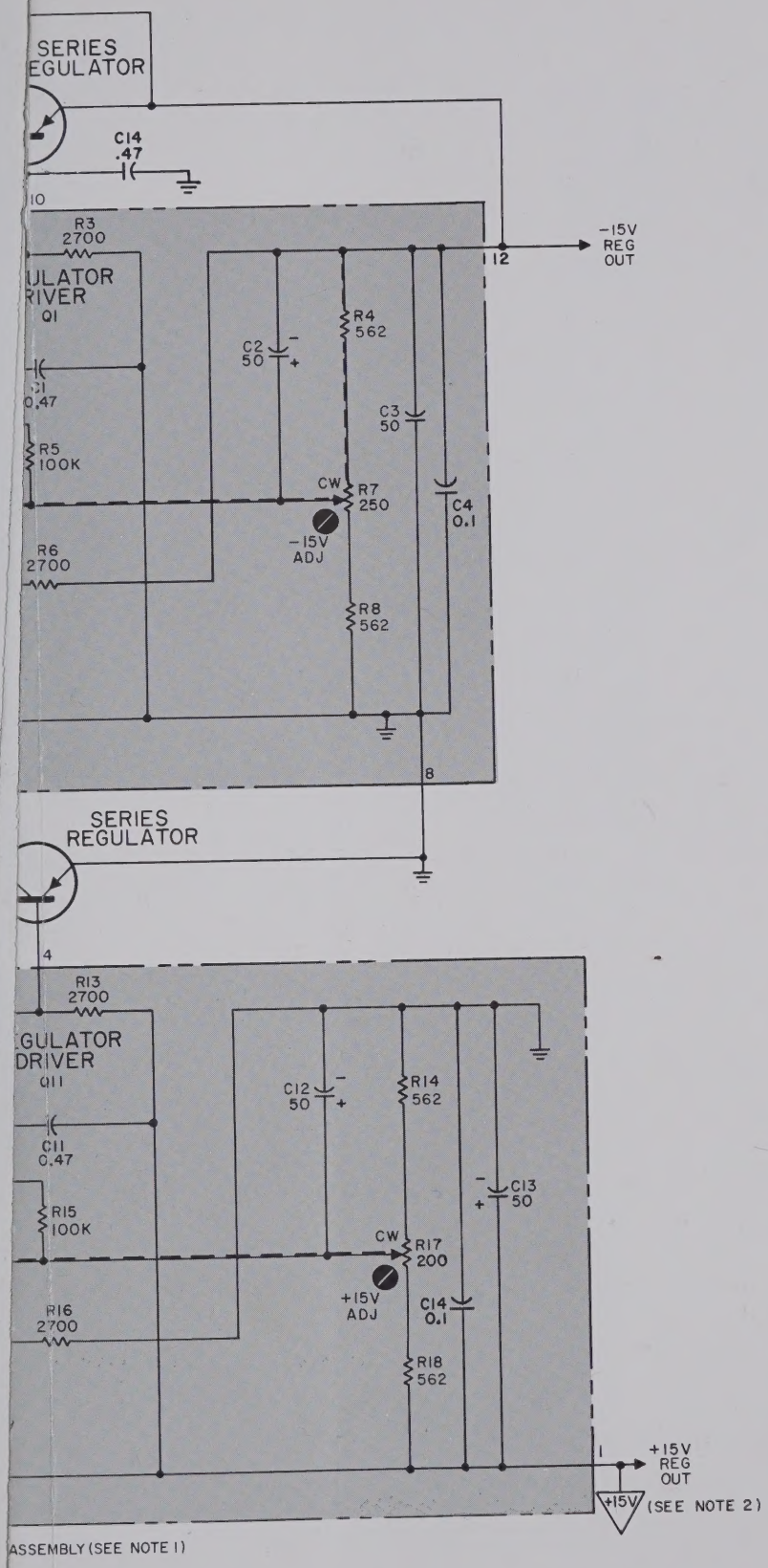

Figure 5-25. Power Supply

COLLECTOR OF Q1 OR Q3
1.2V P-P
5ms/CM

310A-A-2365

MEASUREMENT CONDITIONS:

a. Model 310A set to NORMAL, 10 kc, 3000 cps, AMPLITUDE cw, 1V, and ODB.

b. Model 175A with X10 probe set to 0.1 msec/cm, and appropriate vertical sensitivity.

c. Model 200S Oscillator set to 10 kc, and for a 1-volt Model 310A meter reference.

Figure 5-24. Power Supply Ripple

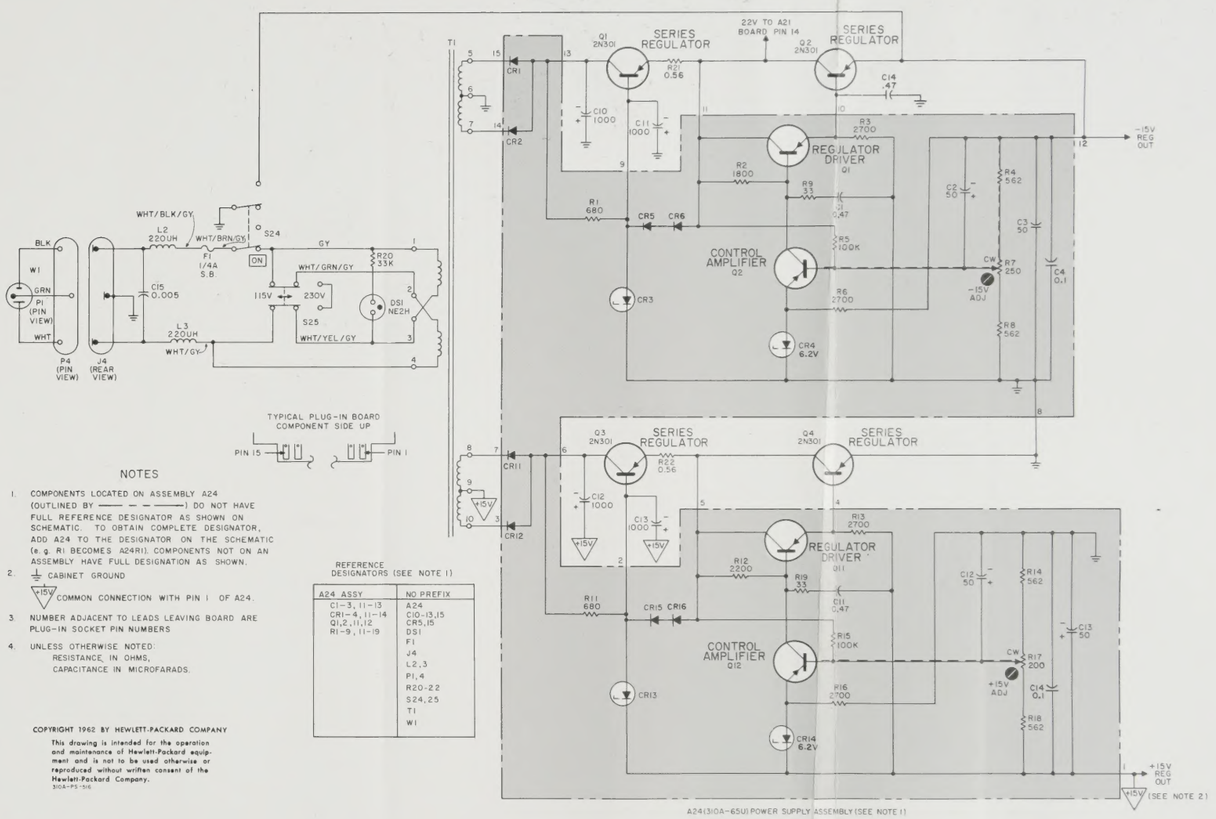

NOTES

1. COMPONENTS LOCATED ON ASSEMBLY A24 (OUTLINED BY — — — —) DO NOT HAVE FULL REFERENCE DESIGNATOR AS SHOWN ON SCHEMATIC. TO OBTAIN COMPLETE DESIGNATOR, ADD A24 TO THE DESIGNATOR ON THE SCHEMATIC (e.g. R1 BECOMES A24R1). COMPONENTS NOT ON AN ASSEMBLY HAVE FULL DESIGNATION AS SHOWN.
2. ⏚ CABINET GROUND
   ▽ +15V COMMON CONNECTION WITH PIN 1 OF A24.
3. NUMBER ADJACENT TO LEADS LEAVING BOARD ARE PLUG-IN SOCKET PIN NUMBERS
4. UNLESS OTHERWISE NOTED:
   RESISTANCE, IN OHMS;
   CAPACITANCE IN MICROFARADS.

REFERENCE DESIGNATORS (SEE NOTE 1)

A24 ASSY	NO PREFIX
C1-3, 11-13	A24
CR1-4, 11-14	C10-13,15
Q1,2,11,12	CR5,15
R1-9, 11-19	DS1
	F1
	J4
	L2,3
	P1,4
	R20-22
	S24,25
	T1
	W1

COPYRIGHT 1962 BY HEWLETT-PACKARD COMPANY

This drawing is intended for the operation and maintenance of Hewlett-Packard equipment and is not to be used otherwise or reproduced without written consent of the Hewlett-Packard Company.

310A-PS-516

Figure 5-25. Power Supply

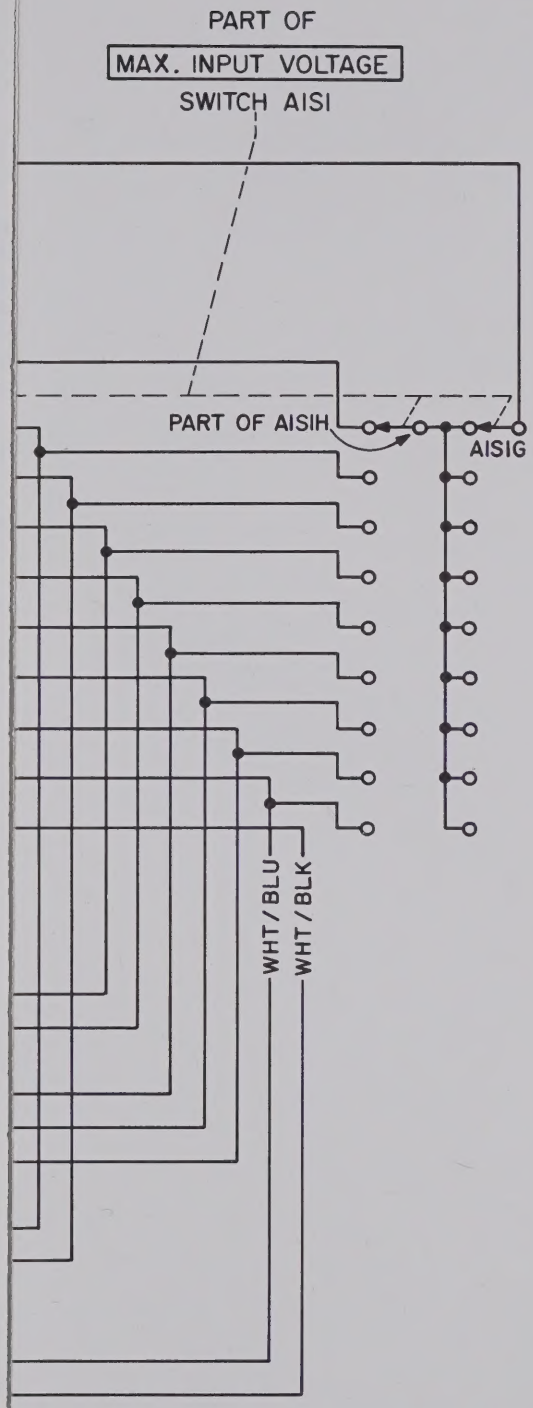

1. SWITCHES SHOWN CCW. WAFERS IDENTIFIED BY LETTER STARTING WITH WAFER NEAREST FRONT PANEL, (A= FRONT SIDE OF FIRST WAFER,) (B= REAR SIDE OF FIRST WAFER, ETC.)
2. ▭ INDICATES FRONT PANEL CONTROL

IGHT 1962 BY HEWLETT-PACKARD COMPANY

310A-LIGHTS, SWITCHING SEQUENCE- 312 AB

Figure 5-26. Light Switching Sequence

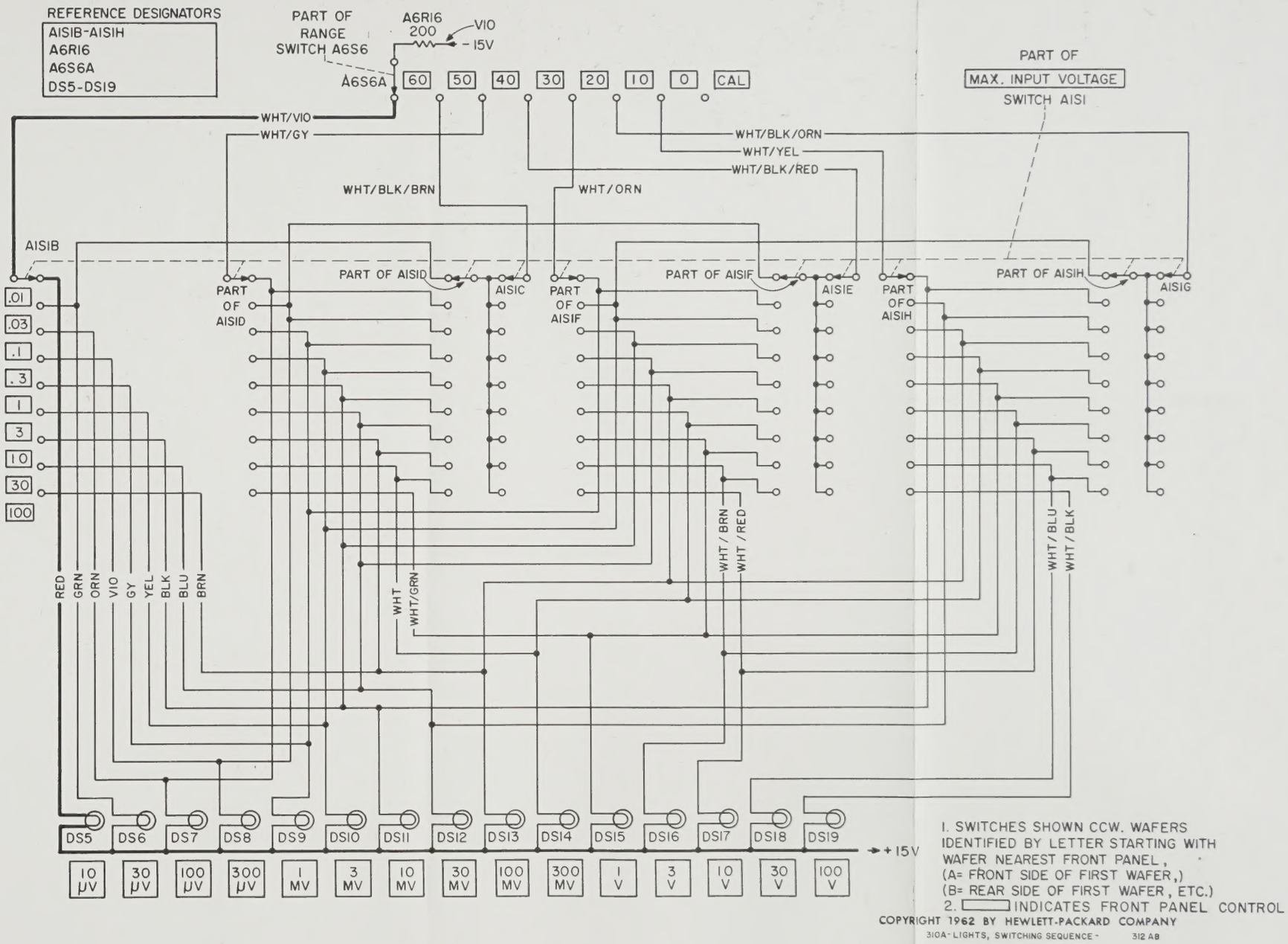

Figure 5-26. Light Switching Sequence

SECTION VI
REPLACEABLE PARTS

6-1. INTRODUCTION.

6-2. This section contains information for ordering replacement parts. Table 6-1 lists parts in alpha-numerical order of their reference designators and indicates the description and ⓗⓟ stock number of each part, together with any applicable notes. Table 6-2 lists parts in alpha-numerical order of their ⓗⓟ stock number and provides the following information on each part:

a. Description of the part (see list of abbreviations below).

b. Typical manufacturer of the part in a five-digit code; see list of manufacturers in Table 6-3.

c. Manufacturer's part number.

d. Total quantity used in the instrument (TQ column).

6-3. Miscellaneous parts are listed at the end of Table 6-1.

6-4. ORDERING INFORMATION.

6-5. To obtain replacement parts, address order or inquiry to your local Hewlett-Packard Field Office (see maps at rear of this manual for addresses). Identify parts by their Hewlett-Packard stock numbers.

6-6. To obtain a part that is not listed, include:

a. Instrument model number.

b. Instrument serial number.

c. Description of the part.

d. Function and location of the part.

REFERENCE DESIGNATORS

A	= assembly	E	= misc electronic part	MP	= mechanical part	TB	= terminal board
B	= motor	F	= fuse	P	= plug	TP	= test point
C	= capacitor	FL	= filter	Q	= transistor	V	= vacuum tube, neon bulb, photocell, etc.
CP	= coupling	J	= jack	R	= resistor	W	= cable
CR	= diode	K	= relay	RT	= thermistor	X	= socket
DL	= delay line	L	= inductor	S	= switch	Y	= crystal
DS	= device signaling (lamp)	M	= meter	T	= transformer		

ABBREVIATIONS

A	= amperes	GE	= germanium	N/C	= normally closed	RMO	= rack mount only
A.F.C	= automatic frequency control	GL	= glass	NE	= neon	RMS	= root-mean-square
AMPL	= amplifier	GRD	= ground(ed)	NI PL	= nickel plate		
				N/O	= normally open	S-B	= slow-blow
B.F.O.	= beat frequency oscillator	H	= henries	NPO	= negative positive zero (zero temperature coefficient)	SCR	= screw
BE CU	= beryllium copper	HEX	= hexagonal			SE	= selenium
BH	= binder head	HG	= mercury			SECT	= section(s)
BP	= bandpass	HR	= hour(s)	NRFR	= not recommended for field replacement	SEMICON	= semiconductor
BRS	= brass					SI	= silicon
BWO	= backward wave oscillator	IF	= intermediate freq	NSR	= not separately replaceable	SIL	= silver
		IMPG	= impregnated			SL	= slide
		INCD	= incandescent			SPL	= special
CCW	= counter-clockwise	INCL	= include(s)	OBD	= order by description	SST	= stainless steel
CER	= ceramic	INS	= insulation(ed)	OH	= oval head	SR	= split ring
CMO	= cabinet mount only	INT	= internal	OX	= oxide	STL	= steel
COEF	= coefficient						
COM	= common						
COMP	= composition	K	= kilo = 1000	P	= peak	TA	= tantalum
CONN	= connector			PC	= printed circuit	TD	= time delay
CP	= cadmium plate	LIN	= linear taper	PF	= picofarads = 10^{-12} farads	TGL	= toggle
CRT	= cathode-ray tube	LK WASH	= lock washer			TI	= titanium
CW	= clockwise	LOG	= logarithmic taper	PH BRZ	= phosphor bronze	TOL	= tolerance
		LPF	= low pass filter	PHL	= Phillips	TRIM	= trimmer
DEPC	= deposited carbon			PIV	= peak inverse voltage	TWT	= traveling wave tube
DR	= drive	M	= milli = 10^{-3}	P/O	= part of		
		MEG	= meg = 10^{-6}	POLY	= polystyrene	U	= micro = 10^{-6}
ELECT	= electrolytic	METFLM	= metal film	PORC	= porcelain		
ENCAP	= encapsulated	MFR	= manufacturer	POS	= position(s)	VAR	= variable
EXT	= external	MINAT	= miniature	POT	= potentiometer	VDCW	= dc working volts
		MOM	= momentary	PP	= peak-to-peak		
F	= farads	MTG	= mounting	PT	= point	W/	= with
FH	= flat head	MY	= "mylar"	RECT	= rectifier	W	= watts
FIL H	= fillister head			RF	= radio frequency	WW	= wirewound
FXD	= fixed	N	= nano (10^{-9})	RH	= round head	W/O	= without

Table 6-1. Reference Designation Index

Reference Designation	Stock No.	Description #	Note
A1	310A-19A	SWITCH ASSY:INPUT ATTENUATOR	
A1C1	0140-0144	C:FXD MICA 18 PF 0.5%	
A1C2	0140-0040	C:FXD MICA 75 PF 5% 500VDCW	
A1C3	0160-0139	C:FXD MICA 270PF 2% 300VDCW	
A1C4	0140-0091	C:FXD MICA 820 PF 10%	
A1C5	0140-0024	C:FXD MICA 2200 PF 10% 500VDCW	
A1C6	0130-0006	C:VAR CER 5-20 PF 500VDCW	
A1C7	0140-0071	C:FXD MICA 5600 PF 5% 300VDCW	
A1C8	0140-0197	C:FXD MICA 180 PF 5% 300 VDCW	
A1C9	0160-0139	C:FXD MICA 270PF 2% 300VDCW	
A1R1	0698-5412	R:FXD film 4.624K ohm .25% 1/8W	
A1R2	0698-5408	R:FXD film 1.111K ohm .25% 1/8W	
A1R3	0727-0488	R:FXD CARBON 326 OHM 1/2% 1/2W	
A1R4	0698-5519	R:FXD Met flm 100K OHM .5% 1/2W	
A1R5	0727-0416	R:FXD DEPC 69.0 OHM 1/2% 1/2W	
A1R6	0698-5193	R:FXD flm 63.45 ohm .5% 1/8W	
A1R7	0727-0418	R:FXD DEPC 43.7 OHM 1/2% 1/2W	
A1R8	0727-0487	R:FXD CARBON 20.1 OHM 1/2% 1/2W	
A1R9	2100-0408	R:VAR COMP 250 OHM 30% 1/2W	
A1S1	3100-0359	SWITCH:ROTARY 8 SECT 9 POS	
	5040-0218	COUPLER: PLASTIC	
A2	310A-65R	ASSY:INPUT ATTENUATOR BOARD	
A2C1	0121-0147	C:VAR air 2 to 19.3 pF	
A2C2	0121-0147	C:VAR air 2 to 19.3 pF	
A2C3	0121-0147	C:VAR air 2 to 19.3 pF	
A2C4	0121-0147	C:VAR air 2 to 19.3 pF	
A2C5	0121-0147	C:var air 2 to 19.3 pF	
A2C6*	0140-0201	C:fxd 12 pF 5%	
A2C7*	0160-0763	C:fxd mica 5 pF 10%	
A2R1	0727-0412	R:FXD CARBON 21.5K OHM 1% 1/2W	
A2R2	0698-5487	R:FXD met flm 90K ohm .5% 1/2W	
A2R3	0727-0414	R:FXD car flm 96.8K ohm 1% 1/2W	
A2R4	0757-0125	R:FXD MET FLM 98.8K OHM 1% 1/10W	
A2R5	0727-0413	R:FXD DEPC 99.7K OHM 1% 1/2W	
A3	310A-65T	ASSY:INPUT AMP CAL OPTION 01 ONLY	
A3	310A-65G	ASSY:INPUT AMP AND CALIB NOT USED IN OPTION 01	
A3C1	0150-0084	C:FXD CER 0.1 UF ±80/20% 50VDCW	
A3C2	0150-0012	C:FXD CER 0.01 UF 20% 1000VDCW	
A3C3	0140-0010	C:FXD MICA 820 pF 10%	
A3C4	0121-0427	C:VAR MICA 170-780 PF 175VDCW	
A3C5	0180-0058	C:FXD ELECT 50UF -10%+100% 25VDCW	Option 01 and standard
A3C6	0180-0058	C:FXD ELECT 50UF -10%+100% 25VDCW	Option 01 and standard
A3C7	0170-0066	C:FXD MY 0.027UF 10% 200VDCW	Option 01 and standard
A3C8	0180-0033	C:FXD ELECT 50UF 6VDCW	Option 01 and standard
A3C9	0180-0033	C:FXD ELECT 50UF 6VDCW	Option 01 and standard
A3C10	0140-0110	C:FXD MICA 127 PF 2% 300VDCW	Option 01 and standard
A3C11	0160-2056	C:FXD MY 0.22 UF 20% 200VDCW	Option 01 and standard

See list of abbreviations in introduction to this section

Table 6-1. Reference Designation Index (Cont'd)

Reference Designation	Stock No.	Description #		Note
A3C12	0180-0060	C:FXD ELECT 200UF -10%+100% 3VDCW	Option 01 and standard	
A3C13	0180-0058	C:FXD ELECT 50UF -10%+100% 25VDCW	Option 01 and standard	
A3C14 THRU A3C50		NOT ASSIGNED		
A3C51	0170-0085	C:FXD MY 0.1UF 20% 50VDCW	Option 01 only	
A3C52	0140-0225	C:FXD MICA 300 PF 1%	Option 01 only	
A3C53	0140-0184	C:FXD MICA 8200 PF 1% 100VDCW	Option 01 only	
A3C54	0121-0142	C:VAR MICA 16-150 PF 175VDCW	Option 01 only	
A3C55	0140-0196	C:FXD MICA 150 PF 5%	Option 01 only	
A3C56	0121-0142	C:VAR MICA 16-150 PF 175VDCW	Option 01 only	
A3CR1	1910-0016	DIODE:GERMANIUM 100MA AT 0.85V 60PIV		
A3CR2	1902-0009	DIODE,BREAKDOWN:7.5V 10% 400MW		
A3CR3		NOT ASSIGNED		
A3CR4,CR5	1901-0040	DIODE:SILICON 30MA 30WV	Option 01 and standard	
A3CR6 THRU A3CR50		NOT ASSIGNED		
A3CR51	1910-0016	DIODE:GERMANIUM 100MA AT 0.85V 60PIV	Option 01 only	
A3CR52	1910-0016	DIODE:GERMANIUM 100MA AT 0.85V 60PIV	Option 01 only	
A3L51	9140-0072	COIL:RF 5000 UH 10%	Option 01 only	
A3Q1	1853-0012	TRANSISTOR: SI PNP		
A3Q2	1853-0012	TRANSISTOR: SI PNP		
A3Q3	1853-0020	TRANSISTOR: PNP Si	Option 01 and standard	
A3Q4	1853-0020	TRANSISTOR: PNP Si	Option 01 and standard	
A3Q5	1853-0020	TRANSISTOR: PNP Si	Option 01 and standard	
A3Q6 THRU A3Q50		NOT ASSIGNED		
A3Q51	1854-0003	TRANSISTOR:NPN SILICON	Option 01 only	
A3Q52	1854-0011	TRANSISTOR:2N835 NPN SILICON	Option 01 only	
A3Q53	1854-0011	TRANSISTOR:2N835 NPN SILICON	Option 01 only	
A3R1	0687-1031	R:FXD COMP 10K OHM 10% 1/2W		
A3R2	0687-3921	R:FXD COMP 3900 OHM 10% 1/2W		
A3R3	0687-2231	R: FXD COMP 22K OHM 10% 1/2W		
A3R4	0687-5621	R:FXD COMP 5600 OHM 10% 1/2W		
A3R5	0687-4721	R:FXD COMP 4700 OHM 10% 1/2W		
A3R6	0687-4721	R:FXD COMP 4700 OHM 10% 1/2W		
A3R7	0687-4721	R:FXD COMP 4700 OHM 10% 1/2W		
A3R8	0687-1031	R: FXD COMP 10K OHM 10% 1/2W		
A3R9,R10		NOT ASSIGNED		
A3R11	0687-1011	R:FXD COMP 100 OHM 10% 1/2W	Option 01 and standard	
A3R12	0687-1221	R:FXD COMP 1200 OHM 10% 1/2W	Option 01 and standard	
A3R13	0757-0718	R:FXD MET FLM 200 OHM 1% 1/4W	Option 01 and standard	
A3R14	0687-1011	R:FXD COMP 100 OHM 10% 1/2W	Option 01 and standard	
A3R15	0757-0341	R:FXD MET FLM 30.1K OHM 1% 1/4W	Option 01 and standard	
A3R16	0690-1021	R:FXD COMP 1000 OHM 10% 1W	Option 01 and standard	
A3R17	0758-0034	R:FXD MET OX 2400 OHM 5% 1/2W	Option 01 and standard	
A3R18	0758-0033	R:FXD MET OX 2000 OHM 5% 1/2W	Option 01 and standard	
A3R19	0757-0757	R:FXD MET FLM 15K OHM 1% 1/4W	Option 01 and standard	
A3R20	0758-0079	R:FXD MET OX 30K OHM 5% 1/2W	Option 01 and standard	

See list of abbreviations in introduction to this section

Table 6-1. Reference Designation Index (Cont'd)

Reference Designation	Stock No.	Description #		Note
A3R21	0758-0044	R:FXD MET OX 2200 OHM 5% 1/2W	Option 01 and standard	
A3R22	0687-1021	R:FXD COMP 1000 OHM 10% 1/2W	Option 01 and standard	
A3R23	0687-2211	R:FXD COMP 220 OHM 10% 1/2W	Option 01 and standard	
A3R24	0687-1821	R:FXD COMP 1800 OHM 10% 1/2W	Option 01 and standard	
A3R25	0687-1031	R:FXD COMP 10K OHM 10% 1/2W	Option 01 and standard	
A3R26	0687-6801	R:FXD COMP 68 OHM 10% 1/2W	Option 01 and standard	
A3R27 THRU				
A3R50		NOT ASSIGNED		
A3R51	0687-1231	R:FXD COMP 12K OHM 10% 1/2W	Option 01 only	
A3R52	0687-4721	R:FXD COMP 4700 OHM 10% 1/2W	Option 01 only	
A3R53	0687-2221	R:FXD COMP 2200 OHM 10% 1/2W	Option 01 only	
A3R54	0698-3222	R:FXD flm 20.5K ohm 1% 1/4W	Option 01 only	
A3R55	0698-3217	R:FXD flm 24.9K ohm 1% 1/4W	Option 01 only	
A3R56	0687-4721	R:FXD COMP 4700 OHM 10% 1/2W	Option 01 only	
A3R57	0687-1021	R:FXD COMP 1000 OHM 10% 1/2W	Option 01 only	
A3R58	0687-1811	R:FXD COMP 180 OHM 10% 1/2W	Option 01 only	
A3R59	0687-4721	R:FXD COMP 4700 OHM 10% 1/2W	Option 01 only	
A3R60	0687-1531	R:FXD COMP 15K OHM 10% 1/2W	Option 01 only	
A3R61	0687-2731	R:FXD COMP 27K OHM 10% 1/2W	Option 01 only	
A3R62	0687-1531	R:FXD COMP 15K OHM 10% 1/2W	Option 01 only	
A3R63	0687-1531	R:FXD COMP 15K OHM 10% 1/2W	Option 01 only	
A4	310A-65S	ASSY:1.5MC LOW PASS FILTER		
A4C1	0160-0189	C:FXD MICA 73PF 1% 300VDCW		
A4C2	0160-0187	C:FXD MICA 42PF 1% 300VDCW		
A4C3	0160-0186	C:FXD MICA 10.7+/-0.25PF 300VDCW		
A4C4	0140-0111	C:FXD MICA 101.4 PF 2% 500VDCW		
A4C5	0160-0190	C:FXD MICA 225PF 1% 300VDCW		
A4C6	0160-0191	C:FXD MICA 272PF 1% 300VDCW		
A4C7	0160-0203	C:FXD MICA 150 PF 1% 300VDCW		
A4L1	9140-0153	COIL:FXD RF 36.8 UH		
A4L2	9140-0152	COIL:FXD RF 41.06 UH		
A4L3	9140-0154	COIL:FXD RF 53.8 UH		
A5	310A-65E	ASSY:3MC LOW PASS FILTER		
A5C1	0140-0228	C:FXD MICA 360 PF 1% 300VDCW		
A5C2	0140-0109	C:FXD MICA 209 PF 2% 300VDCW		
A5C3	0160-0188	C:FXD MICA 53PF 5% 300VDCW		
A5C4	0160-0192	C:FXD MICA 525PF 5% 300VDCW		
A5C5	0160-0193	C:FXD MICA 1125PF 5% 300VDCW		
A5C6	0140-0155	C:FXD MICA 1325 PF 1% 500VDCW		
A5C7	0140-0150	C:FXD MICA 731.5 PF 1% 300VDCW		
A5L1	9140-0149	COIL:FXD RF 1.86 UH		
A5L2	9140-0151	COIL:FXD RF 2.07 UH		
A5L3	9140-0150	COIL:FXD RF 2.75 UH		
A6	310A-19B	SWITCH ASSY:I.F. ATTENUATOR		
A6R1	0757-1006	R:FXD MET FLM 71.15 OHM 1/4% 1/2W		

See list of abbreviations in introduction to this section

Table 6-1. Reference Designation Index (Cont'd)

Reference Designation	Stock No.	Description #	Note
A6R2,R3	0757-1007	R:FXD MET FLM 96.25 OHM 1/4% 1/2W	
A6R4	0757-1008	R:FXD MET FLM 247.5 OHM 1/4% 1/2W	
A6R5	0757-1005	R: FXD MET FLM 61.11 OHM 1/4% 1/2W	
A6R6	0757-1005	R: FXD MET FLM 61.11 OHM 1/4% 1/2W	
A6R7	0757-1009	R:FXD MET FLM 790 OHM 1/4% 1/2W	
A6R8	0757-1004	R:FXD MET FLM 53.27 OHM 1/4% 1/2W	
A6R9	0757-1004	R:FXD MET FLM 53.27 OHM 1/4% 1/2W	
A6R10 THRU A6R15		NOT ASSIGNED	
A6R16	0758-0062	R:FXD MET OX 200 OHM 5% 1/2W	
A6S6	3100-0360	SWITCH:ROTARY 4 SECT 8 POS	
A7	310A-65P	ASSY:LOCAL OSCILLATOR	
A7C1	0150-0096	C:FXD CER 0.05 UF +80-20% 100VDCW	
A7C2	0150-0096	C:FXD CER 0.05 UF +80-20% 100VDCW	
A7C3	0170-0055	C:FXD MY 0.1UF 20% 200VDCW	
A7C4	0140-0202	C:FXD MICA 15PF 5%	
A7C5	0121-0031	C:VAR AIR 1.85-10.38 PF	
A7C6	0140-0204	C:FXD MICA 47PF 5% NPO 500VDCW	
A7C7	0140-0163	C:FXD MICA 4751 PF 1% 300VDCW	
A7C8	0150-0093	C:FXD CER 0.01 UF +80-20% 100VDCW	
A7C9	0150-0096	C:FXD CER 0.05 UF +80-20% 100VDCW	
A7CR1	0122-0015	VARICAPACITOR:GLASS 150 PF 10WIV	
A7CR2	0122-0015	VARICAPACITOR:GLASS 150 PF 10WIV	
A7L1	9140-0029	COIL:RF CHOKE 100 MH	
A7L2	9140-0061	COIL:VAR 0.780-1.25 UH	
A7L3	9140-0029	COIL:RF CHOKE 100 MH	
A7Q1	1853-0020	TRANSISTOR: PNP Si	
A7R1	0758-0006	R:FXD MET OX 10K OHM 5% 1/2W	
A7R2	0758-0068	R:FXD flm 910 ohm 5% 1/4W	
A7R3	0687-1531	R:FXD COMP 15K OHM 10% 1/2W	
A7R4	0758-0078	R:FXD MET OX 13K OHM 5% 1/2W	
A7R5	0687-2731	R:FXD COMP 27K OHM 10% 1/2W	
A7T1	310A-9P	TRANSFORMER ASSY	
A8	310A-65H	ASSY:LOCAL OSC AMP & INPUT MIXER	
A8C1	0150-0096	C:FXD CER 0.05 UF +80-20% 100VDCW	
A8C2	0150-0096	C:FXD CER 0.05 UF +80-20% 100VDCW	
A8C3	0150-0096	C:FXD CER 0.05 UF +80-20% 100VDCW	
A8C4	0121-0038	C:VAR AIR 1.8-4.6 PF	
A8C5	0121-0427	C:VAR MICA 170-780 PF 175VDCW	
A8C6	0150-0084	C:FXD CER 0.1 UF +80-20% 50VDCW	
A8C7	0150-0096	C:FXD CER 0.05 UF +80-20% 100VDCW	
A8C8	0150-0096	C:FXD CER 0.05 UF +80-20% 100VDCW	
A8C9	0150-0096	C:FXD CER 0.05 UF +80-20% 100VDCW	
A8C10	0180-0059	C:FXD ELECT 10 UF +75-10% 25VDCW	
A8CR1	1910-0016	DIODE:GERMANIUM 100MA AT 0.85V 60PIV	
A8CR2	1910-0016	DIODE:GERMANIUM 100MA AT 0.85V 60PIV	

See list of abbreviations in introduction to this section

Table 6-1. Reference Designation Index (Cont'd)

Reference Designation	Stock No.	Description #	Note
A8CR3	1901-0040	DIODE:SILICON 30MA 30WV	
A8CR4	1901-0040	DIODE:SILICON 30MA 30WV	
A8CR5	1901-0040	DIODE:SILICON 30MA 30WV	
A8CR6	1901-0040	DIODE:SILICON 30MA 30WV	
A8L1	9140-0029	COIL:RF CHOKE 100 MH	
A8Q1	1853-0020	TRANSISTOR: PNP Si	
A8Q2	1850-0062	TRANSISTOR:SPL2N404A	
A8Q3	1853-0020	TRANSISTOR: PNP Si	
A8Q4	1853-0020	TRANSISTOR: PNP Si	
A8R1	0687-2211	R:FXD COMP 220 OHM 10% 1/2W	
A8R2	0687-2201	R:FXD COMP 22 OHM 10% 1/2W	
A8R3	0687-8211	R:FXD COMP 820 OHM 10% 1/2W	
A8R4	0758-0017	R:FXD MET OX 1500 OHM 5% 1/2W	
A8R5	0758-0003	R:FXD MET OX 1000 OHM 5% 1/2W	
A8R6	0757-1006	R:FXD MET FLM 71.15 OHM 1/4% 1/2W	
A8R7	0758-0024	R:FXD MET OX 100 OHM 5% 1/2W	
A8R8	0757-0159	R:FXD MET FLM 1000 OHM 1% 1/2W	
A8R9	2100-0360	R:VAR COMP 250 OHM 30% 1/4W	
A8R10	0758-0025	R:FXD MET OX 160 OHM 5% 1/2W	
A8R11	0757-0159	R:FXD MET FLM 1000 OHM 1% 1/2W	
A8R12	0757-0159	R:FXD MET FLM 1000 OHM 1% 1/2W	
A8R13	0757-0159	R:FXD MET FLM 1000 OHM 1% 1/2W	
A8R14	0687-5621	R:FXD COMP 5600 OHM 10% 1/2W	
A8R15	0687-1021	R:FXD COMP 1000 OHM 10% 1/2W	
A8R16	0758-0035	R:FXD MET OX 3000 OHM 5% 1/2W	
A8R17	0687-3321	R:FXD COMP 3300 OHM 10% 1/2W	
A8R18	0687-4721	R:FXD COMP 4700 OHM 10% 1/2W	
A8R19	0687-1031	R:FXD COMP 10K OHM 10% 1/2W	
A8R20	0687-2201	R:FXD COMP 22 OHM 10% 1/2W	
A8R21	0687-1021	R:FXD COMP 1000 OHM 10% 1/2W	
A8R22	0687-2201	R:FXD COMP 22 OHM 10% 1/2W	
A8R23	0687-8211	R:FXD COMP 820 OHM 10% 1/2W	
A8R24	0698-3122	R: FXD MET FLM 412 OHM 1% 1/4W	
A8R25	0757-0739	R:FXD MET FLM 2000 OHM 1% 1/4W	
A8T1	310A-9J	TRANSFORMER ASSY	
A8T2	310A-9R	TRANSFORMER ASSY	
A8T3	310A-9H	TRANSFORMER ASSY	
A9	310A-65B	ASSY:1ST MIXER PAIR	
A9C1	0160-0127	C:FXD CER 1UF 20% 25VDCW	
A9C2	0150-0012	C:FXD CER 0.01 UF 20% 1000VDCW	
A9C3	0150-0096	C:FXD CER 0.05 UF +80-20% 100VDCW	
A9C4	0150-0012	C:FXD CER 0.01 UF 20% 1000VDCW	
A9C5	0150-0084	C:FXD CER 0.1 UF +80-20% 50VDCW	
A9C6	0150-0084	C:FXD CER 0.1 UF +80-20% 50VDCW	
A9C7	0121-0427	C:VAR MICA 170-780 PF 175VDCW	
A9C8 THRU A9C10		NOT ASSIGNED	

See list of abbreviations in introduction to this section

Table 6-1. Reference Designation Index (Cont'd)

Reference Designation	Stock No.	Description #	Note
A9C11	0121-0427	C:VAR MICA 170-780 PF 175VDCW	
A9C12	0140-0182	C:FXD MICA 5000 PF 2%	
A9C13	0121-0199	C:VAR MICA 110-580 PF 175vdcw	
A9C14		NOT ASSIGNED	
A9C15		NOT ASSIGNED	
A9C16	0121-0427	C:VAR MICA 170-780 PF 175VDCW	
A9C17	0140-0182	C:FXD MICA 5000 PF 2%	
A9C18	0121-0199	C:VAR MICA 110-580 PF 175vdcw	
A9CR1	1901-0040	DIODE:SILICON 30MA 30WV	
A9CR2	1901-0040	DIODE:SILICON 30MA 30WV	
A9CR3	1901-0040	DIODE:SILICON 30MA 30WV	
A9CR4	1901-0040	DIODE:SILICON 30MA 30WV	
A9CR5	1901-0040	DIODE:SILICON 30MA 30WV	
A9CR6	1901-0040	DIODE:SILICON 30MA 30WV	
A9CR7	1901-0040	DIODE:SILICON 30MA 30WV	
A9CR8	1901-0040	DIODE:SILICON 30MA 30WV	
A9L1	9140-0029	COIL:RF CHOKE 100 MH	
A9L2	9140-0105	COIL:MOLDED CHOKE 8.20 UH 10%	
A9Q1	1853-0020	TRANSISTOR: PNP Si	
A9Q2	1853-0020	TRANSISTOR: PNP Si	
A9Q3	1853-0020	TRANSISTOR: PNP Si	
A9R1	0687-1011	R:FXD COMP 100 OHM 10% 1/2W	
A9R2	0698-3206	R:FXD MET FLM 2260 OHM 1% 1/4W	
A9R3	0757-1040	R:FXD MET FLM 50 OHM 1% 1/4W	
A9R4	0758-0071	R:FXD MET OX 4300 OHM 5% 1/2W	
A9R5	0757-0440	R:FXD flm 7.5K ohm 1% 1/8W	
A9R6	0687-2221	R:FXD COMP 2.2Kohm 10% 1/2W	
A9R7	0687-1011	R:FXD COMP 100 OHM 10% 1/2W	
A9R8	0687-4711	R:FXD COMP 470 OHM 10% 1/2W	
A9R9	0687-1021	R:FXD COMP 1000 OHM 10% 1/2W	
A9R10	0687-2221	R:FXD COMP 2200 OHM 10% 1/2W	
A9R11	0687-8211	R:FXD COMP 820 OHM 10% 1/2W	
A9R12 -R14		NOT ASSIGNED	
A9R15	0757-1008	R:FXD MET FLM 247.5 OHM 1/4% 1/2W	
A9R16	0757-0159	R:FXD MET FLM 1000 OHM 1% 1/2W	
A9R17	0757-0159	R:FXD MET FLM 1000 OHM 1% 1/2W	
A9R18	0757-0159	R:FXD MET FLM 1000 OHM 1% 1/2W	
A9R19	0757-0159	R:FXD MET FLM 1000 OHM 1% 1/2W	
A9R20	0757-1008	R:FXD MET FLM 247.5 OHM 1/4% 1/2W	
A9R21	0757-1008	R:FXD MET FLM 247.5 OHM 1/4% 1/2W	
A9R22 THRU A9R24		NOT ASSIGNED	
A9R25	0757-1008	R:FXD MET FLM 247.5 OHM 1/4% 1/2W	
A9R26	0757-0159	R:FXD MET FLM 1000 OHM 1% 1/2W	
A9R27	0757-0159	R:FXD MET FLM 1000 OHM 1% 1/2W	
A9R28	0757-0159	R:FXD MET FLM 1000 OHM 1% 1/2W	
A9R29	0757-0159	R:FXD MET FLM 1000 OHM 1% 1/2W	
A9T1	310A-9A	TRANSFORMER ASSY	

See list of abbreviations in introduction to this section

Table 6-1. Reference Designation Index (Cont'd)

Reference Designation	Stock No.	Description #	Note
A9T2	310A-9B	TRANSFORMER ASSY	
A9T3	310A-9A	TRANSFORMER ASSY	
A9T4	310A-9B	TRANSFORMER ASSY	
A10	310A-19D	SWITCH ASSY:BANDWIDTH	
A10R1	0757-0159	R:FXD MET FLM 1000 OHM 1% 1/2W	
A10R2	0757-0159	R:FXD MET FLM 1000 OHM 1% 1/2W	
A10R3	0757-0159	R:FXD MET FLM 1000 OHM 1% 1/2W	
A10R4	0757-0824	R:FXD MET FLM 2000 OHM 1% 1/2W	
A10R5		NOT ASSIGNED	
A10R6	0757-0159	R:FXD MET FLM 1000 OHM 1% 1/2W	
A10R7	0757-0159	R:FXD MET FLM 1000 OHM 1% 1/2W	
A10R8	0757-0159	R:FXD MET FLM 1000 OHM 1% 1/2W	
A10R9	0757-0824	R:FXD MET FLM 2000 OHM 1% 1/2W	
A10R10		NOT ASSIGNED	
A10R11	0757-0159	R:FXD MET FLM 1000 OHM 1% 1/2W	
A10R12	0757-0159	R:FXD MET FLM 1000 OHM 1% 1/2W	
A10R13	0757-0159	R:FXD MET FLM 1000 OHM 1% 1/2W	
A10R14	0757-0824	R:FXD MET FLM 2000 OHM 1% 1/2W	
A10R15		NOT ASSIGNED	
A10R16	0757-0159	R:FXD MET FLM 1000 OHM 1% 1/2W	
A10R17	0757-0159	R:FXD MET FLM 1000 OHM 1% 1/2W	
A10R18	0757-0159	R:FXD MET FLM 1000 OHM 1% 1/2W	
A10R19	0757-0824	R:FXD MET FLM 2000 OHM 1% 1/2W	
A10S10	3100-0363	SWITCH:ROTARY 2 SECT 3 POS	
A11	310A-65F	ASSY:3MC OSCILLATOR	
A11C1	0121-0142	C:VAR MICA 16-150 PF 175VDCW	
A11C2	0150-0096	C:FXD CER 0.05 UF +80-20% 100VDCW	
A11C3	0121-0426	C:VAR MICA 50 TO 380 PF 175VDCW	
A11C4	0121-0426	C:VAR MICA 50 TO 380 PF 175VDCW	
A11C5		NOT ASSIGNED	
A11C6	0140-0111	C:FXD MICA 101.4 PF 2% 500VDCW	
A11C7	0150-0084	C:FXD CER 0.1 UF +80-20% 50VDCW	
A11C8	0150-0096	C:FXD CER 0.05 UF +80-20% 100VDCW	
A11C9	0150-0096	C:FXD CER 0.05 UF +80-20% 100VDCW	
A11L1	9140-0032	COIL:FXD 10 UH	
A11L2	9140-0155	COIL:FXD RF 28 UH	
A11L3	9140-0053	COIL:FXD 1MH 10%	
A11L4	9140-0029	COIL:RF CHOKE 100 MH	
A11Q1	1853-0020	TRANSISTOR: PNP Si	
A11Q2	1853-0020	TRANSISTOR: PNP Si	
A11Q3	1853-0020	TRANSISTOR: PNP Si	
A11Q4	1853-0020	TRANSISTOR: PNP Si	
A11R1	0687-5621	R:FXD COMP 5600 OHM 10% 1/2W	
A11R2	0687-1031	R:FXD COMP 10K OHM 10% 1/2W	
A11R3	0687-4721	R:FXD COMP 4700 OHM 10% 1/2W	
A11R4	2100-0361	R:VAR COMP 2000 OHM 30% LIN 1/8W	
A11R5	0687-1011	R:FXD COMP 100 OHM 10% 1/2W	

See list of abbreviations in introduction to this section

Table 6-1. Reference Designation Index (Cont'd)

Reference Designation	Stock No.	Description #	Note
A11R6	0687-1011	R:fxd comp 100 ohm 10% 1/2W	
A11R7	0687-6811	R:fxd comp 680 ohm 10% 1/2W	
A11R8 THRU			
A11R9		NOT ASSIGNED	
A11R10	0758-0037	R:FXD MET OX 5100 OHM 5% 1/2W	
A11R11	0758-0010	R:FXD MET OX FLM 3300 OHM 5% 1/2W	
A11R12	0687-8211	R:FXD COMP 820 OHM 10% 1/2W	
A11R13	0687-8211	R:FXD COMP 820 OHM 10% 1/2W	
A11R14	0758-0002	R:FXD MET OX FLM 560 OHM 5% 1/2W	
A11T1	310A-9E	TRANSFORMER ASSY	
A11T2	310A-9F	TRANSFORMER ASSY	
A11Y1	0410-0025	CRYSTAL:QUARTZ 3.0 MC	
A12		NOT ASSIGNED	
A13	310A-65D	ASSY:ACTIVE LOW PASS FILTER	
A13C1	0180-0061	C:FXD ELECT 100UF +100%-10% 15VDCW	
A13C2	0160-0362	C:FXD MICA 510PF 5%	
A13C3	0140-0017	C:fxd mica 4700 pF 10%	
A13C4	0140-0017	C:fxd mica 4700 pF 10%	
A13CR1	1901-0025	DIODE:SILICON 100WV 100MA	
A13CR2	1901-0025	DIODE:SILICON 100WV 100MA	
A13Q1	1853-0020	TRANSISTOR: SI PNP	
A13Q2	1853-0012	TRANSISTOR: SI PNP	
A13Q3	1853-0012	TRANSISTOR: SI PNP	
A13Q4	1853-0012	TRANSISTOR: SI PNP	
A13Q5	1853-0012	TRANSISTOR: SI PNP	
A13Q6	1853-0012	TRANSISTOR: SI PNP	
A13R1	0758-0039	R: FXD MET OX 20K OHM 5% 1/2W	
A13R2	0757-0351	R:FXD MET FLM 402 OHM 1% 1/4W	
A13R3	0758-0073	R:FXD MET OX 24K OHM 5% 1/2W	
A13R4	0758-0049	R:FXD MET OX 33K OHM 5% 1/2W	
A13R5	0758-0074	R:FXD MET OX 27K OHM 5% 1/2W	
A13R6	0727-0116	R:FXD DEPC 2030 OHM 1% 1/2W	
A13R7	0757-0739	R:FXD MET FLM 2000 OHM 1% 1/4W	
A13R8	0757-0069	R:FXD MET FLM 121 OHM 1% 1/4W	
A13R9	0757-0498	R:FXD MET FLM 24.3 OHM 1% 1/4W	
A13R10	0757-0739	R:FXD MET FLM 2000 OHM 1% 1/4W	
A13R11 THRU			
A13R14		NOT ASSIGNED	
A13R15	0758-0078	R:FXD MET OX 13K OHM 5% 1/2W	
A13R16	0757-1068	R:FXD MET FLM 313.5 OHM 1% 1/2W	
A13R17	0758-0038	R:FXD MET OX 9100 OHM 5% 1/2W	
A13R18	0758-0049	R:FXD MET OX 33K OHM 5% 1/2W	
A13R19	0758-0047	R:FXD MET OX 7500 OHM 5% 1/2W	
A13R20	0757-0753	R:FXD MET FLM 9090 OHM 0% 1/4W	
A13R21*	0698-4195	R:FXD flm 1.02K ohm 1% 1/8W	
A13R22	0757-0702	R:FXD MET FLM 36.5 OHM 1% 1/4W	
A13R23	0687-3311	R:FXD COMP 330 OHM 10% 1/2W	
A13R24, 25	0687-3311	R:FXD COMP 330 OHM 10% 1/2W	
A14	310A-65D	ASSY:LOW PASS FILTER	

See list of abbreviations in introduction to this section

Table 6-1. Reference Designation Index (Cont'd)

Reference Designation	Stock No.	Description #	Note
A14C1	0180-0061	C:fxd elect 100 μF +10%-10% 15 vdcw	
A14C2	0160-0362	C:fxd mica 510 pF 5%	
A14C3/A14C4	0140-0017	C:fxd mica 4700 pF 10%	
A14CR1	1901-0025	DIODE:SILICON 100WV 100MA	
A14CR2	1901-0025	DIODE:SILICON 100WV 100MA	
A14Q1	1853-0020	TRANSISTOR: SI PNP	
A14Q2	1853-0012	TRANSISTOR: SI PNP	
A14Q3	1853-0012	TRANSISTOR: SI PNP	
A14Q4	1853-0012	TRANSISTOR: SI PNP	
A14Q5	1853-0012	TRANSISTOR: SI PNP	
A14Q6	1853-0012	TRANSISTOR: SI PNP	
A14R1	0758-0039	R:FXD MET OX 20K OHM 5% 1/2W	
A14R2	0757-0351	R:FXD MET FLM 402 OHM 1% 1/4W	
A14R3	0758-0073	R:FXD MET OX 24K OHM 5% 1/2W	
A14R4	0758-0049	R:FXD MET OX 33K OHM 5% 1/2W	
A14R5	0758-0074	R:FXD MET OX 27K OHM 5% 1/2W	
A14R6	0727-0116	R:FXD DEPC 2030 OHM 1% 1/2W	
A14R7	0757-0739	R:FXD MET FLM 2000 OHM 1% 1/4W	
A14R8	0757-0069	R:FXD MET FLM 121 OHM 1% 1/4W	
A14R9	0757-0498	R:FXD MET FLM 24.3 OHM 1% 1/4W	
A14R10	0757-0739	R:FXD MET FLM 2000 OHM 1% 1/4W	
A14R11 THRU A14R14		NOT ASSIGNED	
A14R15	0758-0078	R:FXD MET OX 13K OHM 5% 1/2W	
A14R16	0757-1068	R:FXD MET FLM 313.5 OHM 1% 1/2W	
A14R17	0758-0038	R:FXD MET OX 9100 OHM 5% 1/2W	
A14R18	0758-0049	R:FXD MET OX 33K OHM 5% 1/2W	
A14R19	0758-0047	R:FXD MET OX 7500 OHM 5% 1/2W	
A14R20	0757-0753	R:FXD MET FLM 9090 OHM 1% 1/4W	
A14R21*	0698-4195	R:FXD flm 1.02K ohm 1% 1/8W	
A14R22	0757-0702	R:FXD MET FLM 36.5 OHM 1% 1/4W	
A14R23	0687-3311	R:FXD COMP 330 OHM 10% 1/2W	
A14R24, 25	0687-3311	R:FXD COMP 330 OHM 10% 1/2W	
A15	310A-65C	ASSY:2ND MIXER PAIR	
A15C1	0150-0096	C:FXD CER 0.05 UF +80-20% 100VDCW	
A15C2	0121-0426	C:VAR MICA 50 TO 380 PF 175VDCW	
A15C3	0121-0038	C:VAR AIR 1.8-4.6 PF	
A15C4	0140-0175	C:FXD MICA 39 PF 2% 300VDCW	
A15C5	0140-0018	C:FXD MICA 1000 PF 5% 500VDCW	
A15C6	0150-0096	C:FXD CER 0.05 UF +80-20% 100VDCW	
A15C7	0121-0426	C:VAR MICA 50 TO 380 PF 175VDCW	
A15C8	0121-0038	C:VAR AIR 1.8-4.6 PF	
A15CR1	1901-0040	DIODE:SILICON 30MA 30WV	
A15CR2	1901-0040	DIODE:SILICON 30MA 30WV	
A15CR3	1901-0040	DIODE:SILICON 30MA 30WV	
A15CR4	1901-0040	DIODE:SILICON 30MA 30WV	
A15CR5	1901-0040	DIODE:SILICON 30MA 30WV	
A15CR6	1901-0040	DIODE:SILICON 30MA 30WV	
A15CR7	1901-0040	DIODE:SILICON 30MA 30WV	

See list of abbreviations in introduction to this section

Table 6-1. Reference Designation Index (Cont'd)

Reference Designation	Stock No.	Description #	Note
A15CR8	1901-0040	DIODE:SILICON 30MA 30WV	
A15L1	9140-0029	COIL:RF CHOKE 100 MH	
A15L2	9140-0156	COIL:FXD RF 72.3 UH	
A15Q1	1853-0020	TRANSISTOR: PNP Si	
A15R1	0757-0158	R:FXD MET FLM 619 OHM 1% 1/2W	
A15R2	0757-0158	R:FXD MET FLM 619 OHM 1% 1/2W	
A15R3	0757-0158	R:FXD MET FLM 619 OHM 1% 1/2W	
A15R4	0757-0158	R:FXD MET FLM 619 OHM 1% 1/2W	
A15R5	0687-6801	R:FXD COMP 68 OHM 10% 1/2W	
A15R6	2100-0360	R:VAR COMP 250 OHM 30% 1/4W	
A15R7 THRU			
A15R9		NOT ASSIGNED	
A15R10	0758-0004	R:FXD MET OX 2700 OHM 5% 1/2W	
A15R11	0758-0046	R:FXD MET OX 6200 OHM 5% 1/2W	
A15R12	0757-0158	R:FXD MET FLM 619 OHM 1% 1/2W	
A15R13	0757-0158	R:FXD MET FLM 619 OHM 1% 1/2W	
A15R14	0757-0158	R:FXD MET FLM 619 OHM 1% 1/2W	
A15R15	0757-0158	R:FXD MET FLM 619 OHM 1% 1/2W	
A15R16	0687-2701	R:FXD COMP 27 OHM 10% 1/2W	
A15T1	310A-9C	TRANSFORMER	
A15T2	310A-9D	TRANSFORMER ASSY	
A15T3	310A-9G	TRANSFORMER ASSY	
A16	310A-19C	SWITCH ASSY:R.F. ATTENUATOR	
A16C1	0160-0193	C:FXD MICA 1125PF 5% 300VDCW	
A16C2	0140-0180	C:FXD MICA 2000 PF 2% 300VDCW	
A16C3	0160-0193	C:FXD MICA 1125PF 5% 300VDCW	
A16L1	9140-0148	COIL:FXD RF 3.41 UH	
A16L2	9140-0148	COIL:FXD RF 3.41 UH	
A16R1	0757-1006	R:FXD MET FLM 71.15 OHM 1/4% 1/2W	
A16R2	0757-1007	R:FXD MET FLM 96.25 OHM 1/4% 1/2W	
A16R3	0757-1007	R:FXD MET FLM 96.25 OHM 1/4% 1/2W	
A16R4	0757-1008	R:FXD MET FLM 247.5 OHM 1/4% 1/2W	
A16R5	0757-1005	R: FXD MET FLM 61.11 OHM 1/4% 1/2W	
A16R6	0757-1005	R: FXD MET FLM 61.11 OHM 1/4% 1/2W	
A16S16	3100-0361	SWITCH:ROTARY 2 SECT 8 POS	
A17	310A-65J	ASSY:METER AMPLIFIER	
A17C1	0150-0096	C:FXD CER 0.05 UF +80-20% 100VDCW	
A17C2	0150-0096	C:FXD CER 0.05 UF +80-20% 100VDCW	
A17C3	0150-0096	C:FXD CER 0.05 UF +80-20% 100VDCW	
A17C4	0160-0187	C:FXD MICA 42PF 1% 300VDCW	
A17C5	0160-2056	C:FXD MY 0.22 UF 20% 200VDCW	
A17C6	0160-0127	C:FXD CER 1UF 20% 25VDCW	
A17C7	0150-0096	C:FXD CER 0.05 UF +80-20% 100VDCW	
A17C8	0150-0012	C:FXD CER 0.01 UF 20% 1000VDCW	
A17C9	0150-0024	C:FXD CER 0.02 UF +80-20% 600VDCW	
A17C10	0150-0024	C:FXD CER 0.02 UF +80-20% 600VDCW	
A17C11	0180-0033	C:FXD ELECT 50UF 6VDCW	
A17CR1	1901-0040	DIODE:SILICON 30MA 30WV	

See list of abbreviations in introduction to this section

Table 6-1. Reference Designation Index (Cont'd)

Reference Designation	Stock No.	Description #	Note
A17CR2	1901-0040	DIODE:SILICON 30MA 30WV	
A17L1	9140-0029	COIL:RF CHOKE 100 MH	
A17L2	9140-0053	COIL/CHOKE:FXD 1 MH 10%	
A17L3	9140-0154	COIL:FXD RF 53.8 UH	
A17Q1	1853-0020	TRANSISTOR: PNP Si	
A17Q2	1853-0020	TRANSISTOR: PNP Si	
A17Q3	1853-0020	TRANSISTOR: PNP Si	
A17R1	0687-1521	R:FXD COMP 1500 OHM 10% 1/2W	
A17R2	0687-4721	R:FXD COMP 4700 OHM 10% 1/2W	
A17R3	0758-0006	R:FXD MET OX 10K OHM 5% 1/2W	
A17R4	0758-0005	R:FXD MET OX 4700 OHM 5% 1/2W	
A17R5	0727-0027	R:FXD DEPC 53.3 OHM 1% 1/2W	
A17R6	0727-0002	R:FXD DEPC 3.0 OHM 1% 1/2W	
A17R7	0758-0044	R:FXD MET OX 2200 OHM 5% 1/2W	
A17R8	0758-0044	R:FXD MET OX 2200 OHM 5% 1/2W	
A17R9	0687-1221	R:FXD COMP 1200 OHM 10% 1/2W	
A17R10	2100-0361	R:VAR COMP 2000 OHM 30% LIN 1/8W	
A17R11			
A17R14 THRU		NOT ASSIGNED	
A17R15	0687-1211	R:FXD COMP 120 OHM 10% 1/2W	
A17R16	0758-0044	R:FXD MET OX 2200 OHM 5% 1/2W	
A17R17	0687-3321	R:FXD COMP 3300 OHM 10% 1/2W	
A17R18	0687-1011	R:FXD COMP 100 OHM 10% 1/2W	
A17R19	0687-4701	R:FXD COMP 47 OHM 10% 1/2W	
A17R20	0687-5611	R:FXD COMP 560 OHM 10% 1/2W	
A17T1	310A-9N	TRANSFORMER ASSY	
A18	310A-19E	SWITCH ASSY: MODE	
A18R1	0687-3311	R:FXD COMP 330 OHM 10% 1/2W	
A18R2	0687-4721	R:FXD COMP 4700 OHM 10% 1/2W	
A18S18	3100-1589	SWITCH:ROTARY 3 SECT 6 POS	
A19	310A-65N	ASSY:BFO	
A19C1	0150-0084	C:FXD CER 0.1 UF +80-20% 50VDCW	
A19C2	0150-0096	C:FXD CER 0.05 UF +80-20% 100VDCW	
A19C3	0121-0142	C:VAR MICA 16-150 PF 175VDCW	
A19C4	0150-0096	C:FXD CER 0.05 UF +80-20% 100VDCW	
A19C5	0150-0096	C:FXD CER 0.05 UF +80-20% 100VDCW	
A19C6	0121-0142	C:VAR MICA 16-150 PF 175VDCW	
A19C7	0132-0003	C:VAR POLY 0.7-3.0 PF	
A19C8	0150-0096	C:FXD CER 0.05 UF +80-20% 100VDCW	
A19C9		NOT ASSIGNED	
A19C10		NOT ASSIGNED	
A19C11	0150-0096	C:FXD CER 0.05 UF +80-20% 100VDCW	
A19C12	0150-0096	C:FXD CER 0.05 UF +80-20% 100VDCW	
A19C13	0150-0096	C:FXD CER 0.05 UF +80-20% 100VDCW	
A19C14	0150-0096	C:FXD CER 0.05 UF +80-20% 100VDCW	
A19C15	0150-0096	C:FXD CER 0.05 UF +80-20% 100VDCW	
A19C16	0150-0096	C:fxd cer 0.05 μF +80-20% 100 vdcw	

See list of abbreviations in introduction to this section

Table 6-1. Reference Designation Index (Cont'd)

Reference Designation	hp Stock No.	Description #	Note
A19C17	0120-0427	C:VAR MICA 170-780 PF 175VDCW	
A19CR1	1901-0179	Diode: Si	
A19CR2	1901-0179	Diode: Si	
A19CR3	1901-0179	Diode: Si	
A19CR4	1901-0179	Diode: Si	
A19CR5	1901-0040	DIODE:SILICON 30MA 30WV	
A19CR6	1901-0040	DIODE:SILICON 30MA 30WV	
A19CR7	1901-0040	DIODE:SILICON 30MA 30WV	
A19CR8	1901-0040	DIODE:SILICON 30MA 30WV	
A19CR9	1901-0040	DIODE:SILICON 30MA 30WV	
A19CR10	1901-0040	DIODE:SILICON 30MA 30WV	
A19L1	9140-0072	COIL:RF 5000 UH 10%	
A19L2	310A-60A	INDUCTOR:175 MH	
A19Q1	1853-0020	TRANSISTOR:PNP Si	
A19Q2	1853-0020	TRANSISTOR:PNP Si	
A19Q3	1853-0020	TRANSISTOR:PNP Si	
A19R1	0684-1021	R:FXD COMP 1000 OHM 10% 1/4W	
A19R2	0684-1031	R:FXD COMP 10K OHM 10% 1/4W	
A19R3	0684-4721	R:FXD COMP 4700 OHM 10% 1/4W	
A19R4	0683-6825	R:FXD COMP 6800 OHM 5% 1/4W	
A19R5	2100-0361	R:VAR COMP 2000 OHM 30% LIN 1/8W	
A19R6	0684-4721	R:FXD COMP 4700 OHM 10% 1/4W	
A19R7	0684-4711	R:FXD COMP 470 OHM 10% 1/4W	
A19R8	0684-4721	R:FXD COMP 4700 OHM 10% 1/4W	
A19R9		NOT ASSIGNED	
A19R10		NOT ASSIGNED	
A19R11	0684-1031	R:FXD COMP 10K OHM 10% 1/4W	
A19R12	0684-1031	R:FXD COMP 10K OHM 10% 1/4W	
A19R13	0684-1011	R:FXD COMP 100 OHM 10% 1/4W	
A19R14	0684-4721	R:FXD COMP 4700 OHM 10% 1/4W	
A19R15	0684-4721	R:FXD COMP 4700 OHM 10% 1/4W	
A19R16	0684-1031	R:FXD COMP 10K OHM 10% 1/4W	
A19R17	0684-4721	R:FXD COMP 4700 OHM 10% 1/4W	
A19R18	0683-1225	R:FXD COMP 1200 OHM 5% 1/4W	
A19R19	0757-0734	R:FXD MET FLM 1.21K OHM 1%/1/4W	
A19R20	0757-0734	R:FXD MET FLM 1.21K OHM 1%/1/4W	
A19R21	0683-1225	R:FXD COMP 1200 OHM 5% 1/4W	
A19T1	310A-9M	TRANSFORMER	
A19T2	310A-9K	TRANSFORMER	
A19T3	310A-9L	TRANSFORMER	
A19Y1	0410-0025	CRYSTAL:QUARTZ 3.0 MC	
A20	310A-65S	ASSY:1.5MC LOW PASS FILTER	
A20C1	0160-0189	C:FXD MICA 73PF 1% 300VDCW	
A20C2	0160-0187	C:FXD MICA 42PF 1% 300VDCW	
A20C3	0160-0186	C:FXD MICA 10.7+/-0.25PF 300VDCW	
A20C4	0140-0111	C:FXD MICA 101.4 PF 2% 500VDCW	
A20C5	0160-0190	C:FXD MICA 225PF 1% 300VDCW	
	310A-16E	CABLE ASSY	
	310A-16H	CABLE ASSY	

See list of abbreviations in introduction to this section

Table 6-1. Reference Designation Index (Cont'd)

Reference Designation	Stock No.	Description #	Note
A20C6	0160-0191	C:FXD MICA 272PF 1% 300VDCW	
A20C7	0160-0203	C:FXD MICA 150 PF 1% 300VDCW	
A20L1	9140-0153	COIL:FXD RF 36.8 UH	
A20L2	9140-0152	COIL:FXD RF 41.06 UH	
A20L3	9140-0154	COIL:FXD RF 53.8 UH	
A21	310A-65K	ASSY:OUTPUT AMPLIFIER	
A21C1	0160-0174	C:FXD CER 0.47 UF +80-20% 25VDCW	
A21C2	0180-0058	C:FXD ELECT 50UF -10%+100% 25VDCW	
A21C3	0170-0064	C:FXD MY 0.47UF 10% 100VDCW	
A21C4	0180-0104	C:FXD ELECT 200UF 15VDCW	
A21C5	0180-0060	C:FXD ELECT 200UF -10%+100% 3VDCW	
A21C6	0180-0104	C:FXD ELECT 200UF 15VDCW	
A21C7	0180-0058	C:FXD ELECT 50UF -10%+100% 25VDCW	
A21C8	0180-0076	C:FXD ELECT 20UF 25VDCW	
A21C9	0140-0090	C:FXD MICA 200 PF 5%	
A21C10	0180-0060	C:FXD ELECT 200UF -10%+100% 3VDCW	
A21C11	0150-0084	C:FXD CER 0.1 UF +80-20% 50VDCW	
A21C12	0180-0104	C:FXD ELECT 200UF 15VDCW	
A21C13	0180-0059	C:FXD ELECT 10 UF +75-10% 25VDCW	
A21CR1	1901-0040	DIODE:SILICON 30MA 30WV	
A21CR2	1901-0040	DIODE:SILICON 30MA 30WV	
A21L1	9140-0072	COIL:RF 5000 UH 10%	
A21L2	9140-0072	COIL:RF 5000 UH 10%	
A21Q1	1853-0020	TRANSISTOR: PNP Si	
A21Q2	1853-0020	TRANSISTOR: PNP Si	
A21Q3	1853-0003	TRANSISTOR:PNP SILICON F 50MC MIN	
A21R1	0758-0030	R:FXD MET OX 510 OHM 5% 1/2W	
A21R2	0687-5621	R:FXD COMP 5600 OHM 10% 1/2W	
A21R3	0687-5621	R:FXD COMP 5600 OHM 10% 1/2W	
A21R4	0687-6811	R:FXD COMP 680 OHM 10% 1/2W	
A21R5	0687-4701	R:FXD COMP 47 OHM 10% 1/2W	
A21R6	0687-4721	R:FXD COMP 4700 OHM 10% 1/2W	
A21R7	0687-3321	R:FXD COMP 3300 OHM 10% 1/2W	
A21R8	0687-3321	R:FXD COMP 3300 OHM 10% 1/2W	
A21R9	0727-0004	R:FXD DEPC 5 OHM 1% 1/2W	
A21R10	0758-0070	R:FXD MET OX 1200 OHM 5% 1/2W	
A21R11 THRU			
A21R13		NOT ASSIGNED	
A21R14	0687-1011	R:FXD COMP 100 OHM 10% 1/2W	
A21R15	0758-0003	R:FXD MET OX 1000 OHM 5% 1/2W	
A21R16	0687-3311	R:FXD COMP 330 OHM 10% 1/2W	
A21R17	0687-2211	R:FXD COMP 220 OHM 10% 1/2W	
A21R18	0757-1020	R:FXD MET FLM 133 OHM 1% 1/4W	
A21R19	0758-0003	R:FXD MET OX 1000 OHM 5% 1/2W	
A21R20	0687-1511	R:FXD COMP 150 OHM 10% 1/2W	
A21R21	0758-0031	R:FXD MET OX 680 OHM 5% 1/2W	
A21R22	0687-1031	R:FXD COMP 10K OHM 10% 1/2W	

See list of abbreviations in introduction to this section

Table 6-1. Reference Designation Index (Cont' d)

Reference Designation	Stock No.	Description #	Note
A21R23	0758-0054	R:FXD MET OX 330 OHM 5% 1/2W	
A21R24	0686-3305	R:FXD COMP 33 OHM 5% 1/2W	
A22	310A-65L	ASSY:AFC #1	
A22C1	0180-0045	C:FXD ELECT 20UF 25VDCW	
A22C2	0180-0033	C:FXD ELECT 50UF 6VDCW	
A22C3	0180-0144	C:FXD ELECT 200UF -10+100% 25VDCW	
A22C4	0180-0145	C:FXD ELECT 500 UF -10+100% 10VDCW	
A22C5	0180-0144	C:FXD ELECT 200UF -10+100% 25VDCW	
A22C6 THRU A22C10		NOT ASSIGNED	
A22C11	0180-0045	C:FXD ELECT 20UF 25VDCW	
A22C12	0180-0033	C:FXD ELECT 50UF 6VDCW	
A22C13	0180-0124	C:FXD ELECT 200UF 6VDCW	
A22C14		NOT ASSIGNED	
A22C15		NOT ASSIGNED	
A22C16	0170-0018	C:FXD MY 1UF 5% 200VDCW	
A22CR1	1902-0048	DIODE,BREAKDOWN:6.81V 5% 400 MW	
A22CR2	1901-0040	DIODE:SILICON 30MA 30WV	
A22CR3	1901-0040	DIODE:SILICON 30MA 30WV	
A22CR4	1901-0040	DIODE:SILICON 30MA 30WV	
A22CR5	1901-0040	DIODE:SILICON 30MA 30WV	
A22CR6	1910-0016	DIODE:GERMANIUM 100MA AT 0.85V 60PIV	
A22CR7	1910-0016	DIODE:GERMANIUM 100MA AT 0.85V 60PIV	
A22CR8	1910-0016	DIODE:GERMANIUM 100MA AT 0.85V 60PIV	
A22CR9	1910-0016	DIODE:GERMANIUM 100MA AT 0.85V 60PIV	
A22Q1	1853-0066	TRANSISTOR: SI PNP	
A22Q2	1853-0012	TRANSISTOR: SI PNP	
A22Q3	1853-0066	TRANSISTOR: SI PNP	
A22Q4	1854-0003	TRANSISTOR:NPN SILICON	
A22Q5	1854-0003	TRANSISTOR:NPN SILICON	
A22Q6	1853-0012	TRANSISTOR: SI PNP	
A22R1	0687-2701	R: FXD COMP 27 OHM 10% 1/2W	
A22R2	0687-2701	R: FXD COMP 27 OHM 10% 1/2W	
A22R3	0758-0037	R: FXD MET OX 5100 OHM 5% 1/2W	
A22R4	0758-0048	R: FXD MET OX 8.2K OHM 5% 1/2W	
A22R5	0758-0003	R:FXD MET OX 1000 OHM 5% 1/2W	
A22R6	0758-0005	R:FXD MET OX 4700 OHM 5% 1/2W	
A22R7	0758-0017	R:FXD MET OX 1500 OHM 5% 1/2W	
A22R8	0687-1521	R:FXD COMP 1500 OHM 10% 1/2W	
A22R9	0687-1811	R:FXD COMP 180 OHM 10% 1/2W	
A22R10 THRU A22R14		NOT ASSIGNED	
A22R15	0698-3492	R:FXD flm 2670 ohm 1% 1/8W	
A22R16	2100-0361	R:VAR COMP 2000 OHM 30% LIN 1/8W	
A22R17	0687-3321	R:FXD COMP 3300 OHM 10% 1/2W	
A22R18	2100-0361	R:VAR COMP 2000 OHM 30% LIN 1/8W	
A22R19	0758-0019	R:FXD MET OX 18K OHM 5% 1/2W	
A22R20	0758-0019	R:FXD MET OX 18K OHM 5% 1/2W	

 # See list of abbreviations in introduction to this section

Table 6-1. Reference Designation Index (Cont'd)

Reference Designation	Stock No.	Description #	Note
A22R21	0758-0019	R:FXD MET OX 18K OHM 5% 1/2W	
A22R22	0758-0019	R:FXD MET OX 18K OHM 5% 1/2W	
A22R23	0758-0040	R:FXD MET OX 47K OHM 5% 1/2W	
A22R24	0758-0040	R:FXD MET OX 47K OHM 5% 1/2W	
A22R25		NOT ASSIGNED	
A22R26	0758-0072	R:FXD MET OX 16K OHM 5% 1/2W	
A22R27	0758-0032	R:FXD MET OX 820 OHM 5% 1/2W	
A22R28	0758-0010	R:FXD MET OX FLM 3300 OHM 5% 1/2W	
A22R29	0758-0032	R:FXD MET OX 820 OHM 5% 1/2W	
A22R30	0758-0021	R:FXD MET OX 51K OHM 5% 1/2W	
A22R31	0758-0072	R:FXD MET OX 16K OHM 5% 1/2W	
A22R32	0727-0109	R:FXD DEPC 1470 OHM 1% 1/2W	
A22R33	0727-0101	R:FXD DEPC 1.03K OHM 1% 1/2W	
A22R34		NOT ASSIGNED	
A22R35		NOT ASSIGNED	
A22R36	0758-0037	R:FXD MET OX 5100 OHM 5% 1/2W	
A22R37	0758-0048	R:FXD MET OX 10K OHM 5% 1/2W	
A22R38	0758-0003	R:FXD MET OX 1000 OHM 5% 1/2W	
A22R39	0758-0017	R:FXD MET OX 1500 OHM 5% 1/2W	
A22R40	0687-3331	R:FXD COMP 33K OHM 10% 1/2W	
A23	310A-65M	ASSY:AFC #2	
A23C1	0180-0058	C:FXD ELECT 50UF -10%+100% 25VDCW	
A23C2	0180-0111	C:FXD ELECT 2UF 25VDCW	
A23C3		NOT ASSIGNED	
A23C4		NOT ASSIGNED	
A23C5	0180-0058	C:FXD ELECT 50UF -10%+100% 25VDCW	
A23C6			
A23C9		NOT ASSIGNED	
A23C10	0180-0059	C:FXD ELECT 10 UF +75-10% 25VDCW	
A23C11	0180-0059	C:FXD ELECT 10 UF +75-10% 25VDCW	
A23C12	0160-0174	C:FXD CER 0.47 UF +80-20% 25VDCW	
A23C13	0180-0058	C:FXD ELECT 50UF -10%+100% 25VDCW	
A23CR1	1910-0016	DIODE:GERMANIUM 100MA AT 0.85V 60PIV	
A23CR2	1910-0016	DIODE:GERMANIUM 100MA AT 0.85V 60PIV	
A23CR3		NOT ASSIGNED	
A23CR4		NOT ASSIGNED	
A23CR5	1902-0025	DIODE,BREAKDOWN:10.0V 5% 400 MW	
A23CR6	1901-0025	DIODE:SILICON 100WV 100MA	
A23CR7	1901-0025	DIODE:SILICON 100WV 100MA	
A23CR8	1910-0016	DIODE:GERMANIUM 100MA AT 0.85V 60PIV	
A23CR9		NOT ASSIGNED	
A23CR10		NOT ASSIGNED	
A23CR11	1902-0025	DIODE:Breakdown: 10.0V 5% 400 mW	
A23CR12	1901-0025	DIODE:SILICON 100WV 100MA	
A23CR13	1901-0025	DIODE:SILICON 100WV 100MA	
A23CR14	1910-0016	DIODE:GERMANIUM 100MA AT 0.85V 60PIV	
A23K1	0490-0044	RELAY:REED SPST 1/8A 4W	
A23Q1	1854-0003	TRANSISTOR:NPN SILICON	

See list of abbreviations in introduction to this section

Table 6-1. Reference Designation Index (Cont'd)

Reference Designation	Stock No.	Description #	Note
A23Q2	1853-0012	TRANSISTOR: SI PNP	
A23Q3	1854-0003	TRANSISTOR:NPN SILICON	
A23Q4	1854-0003	TRANSISTOR:NPN SILICON	
A23Q5	1854-0003	TRANSISTOR:NPN SILICON	
A23Q6	1854-0003	TRANSISTOR:NPN SILICON	
A23Q7	1851-0017	TRANSISTOR:2N1304	
A23R1	0757-0744	R:FXD MET FLM 3920 OHM 1% 1/4W	
A23R2	0698-0087	R:FXD MET FLM 316 OHM 1% 1/4W	
A23R3	0758-0005	R:FXD MET OX 4700 OHM 5% 1/2W	
A23R4	0757-1023	R:FXD MET FLM 6040 OHM 1% 1/4W	
A23R5	0757-0354	R:FXD MET FLM 3650 OHM 1% 1/4W	
A23R6		NOT ASSIGNED	
A23R7		NOT ASSIGNED	
A23R8	0698-3203	R:FXD MET FLM 4530 OHM 1% 1/4W	
A23R9	0758-0050	R:FXD MET OX 39K OHM 5% 1/2W	
A23R10	0687-1041	R:FXD COMP 100K OHM 10% 1/2W	
A23R11 THRU			
A23R14		NOT ASSIGNED	
A23R15	0757-0753	R:FXD MET FLM 9090 OHM U% 1/4W	
A23R16	0758-0044	R:FXD MET OX 2200 OHM 5% 1/2W	
A23R17	0757-1077	R:FXD MET FLM 15.5K OHM 1%1/2W	
A23R18	0758-0051	R:FXD MET OX 43K OHM 5% 1/2W	
A23R19	0757-0750	R:FXD MET FLM 6810 OHM 1% 1/4W	
A23R20	2100-0361	R:VAR COMP 2000 OHM 30% LIN 1/8W	
A23R21	0757-0751	R:FXD MET FLM 7500 OHM 1% 1/4W	
A23R22 THRU			
A23R25		NOT ASSIGNED	
A23R26	0687-2741	R:FXD COMP 270K OHM 10% 1/2W	
A23R27	2100-0362	R:VAR COMP 100K OHM 30% LIN 1/4W	
A23R28	0758-0005	R:FXD MET OX 4700 OHM 5% 1/2W	
A23R29	0758-0012	R:FXD MET OX 12K OHM 5% 1/2W	
A23R30	0758-0057	R:FXD MET OX 5600 OHM 5% 1/2W	
A23R31 THRU			
A23R34		NOT ASSIGNED	
A23R35	0758-0005	R:FXD MET OX 4700 OHM 5% 1/2W	
A23R36	0758-0055	R:FXD MET OX 360 OHM 5% 1/2W	
A23R37	0758-0070	R:FXD MET OX 1200 OHM 5% 1/2W	
A23R38	0758-0005	R:FXD MET OX 4700 OHM 5% 1/2W	
A23R39	0757-0139	R:FXD MET FLM 1.1 MEGOHM 2% 1/2W	
A23R40	0757-0143	R:FXD MET FLM 332K OHM 1% 1/4W	
A23R41 THRU			
A23R44		NOT ASSIGNED	
A23R45	0687-3341	R:FXD COMP 330K OHM 10% 1/2W	
A23R46	2100-0362	R:VAR COMP 100K OHM 30% LIN 1/4W	
A23R47	0687-1041	R:FXD COMP 100K OHM 10% 1/2W	
A23R48	0758-0073	R:FXD MET OX 24K OHM 5% 1/2W	
A23R49	0687-1811	R:FXD COMP 180 OHM 10% 1/2W	
A23R50	0758-0079	R:FXD MET OX 30K OHM 5% 1/2W	
A23R51	0758-0076	R:FXD MET OX 68K OHM 5% 1/2W	

See list of abbreviations in introduction to this section

Table 6-1. Reference Designation Index (Cont' d)

Reference Designation	Stock No.	Description #	Note
A24	310A-65U	ASSY:POWER SUPPLY	
A24C1	0160-0174	C:FXD CER 0.47 UF +80-20% 25VDCW	
A24C2	0180-0058	C:FXD ELECT 50UF -10%+100% 25VDCW	
A24C3	0180-0058	C:FXD ELECT 50 UF -10+100% 25VDCW	
A24C4	0160-3622	C: FXD .1 UF	
A24C14	0160-2622	C: FXD .01 UF 1000 vdcw	
A24C11	0160-0174	C:FXD CER 0.47 UF +80-20% 25VDCW	
A24C12	0180-0058	C:FXD ELECT 50UF -10%+100% 25VDCW	
A24C13	0180-0058	C:FXD ELECT 50UF -10%+100% 25VDCW	
A24CR1	1901-0028	DIODE:SILICON 400 PIV 0.5 AMP	
A24CR2	1901-0028	DIODE:SILICON 400 PIV 0.5 AMP	
A24CR3	1902-0227	DIODE,BREAKDOWN:22.6V 5% 1.5W	
A24CR4	1902-0777	DIODE, BREAKDOWN: 6.2V 5% 400 MW	
A24CR5, 6	1901-0158	DIODE: SILICON 400 piv 0.5 amp	
A24CR11	1901-0028	DIODE:SILICON 400 PIV 0.5 AMP	
A24CR12	1901-0028	DIODE:SILICON 400 PIV 0.5 AMP	
A24CR13	1902-0227	DIODE,BREAKDOWN:22.6V 5% 1.5W	
A24CR14	1902-0777	DIODE: ZNR 6.2V 5% .25W	
A24CR15, 16	1901-0158	DIODE: SILICON 400 piv 0.5 amp	
A24Q1	1853-0045	TRANSISTOR: SI PNP	
A24Q2	1853-0012	TRANSISTOR: SI PNP	
A24Q3 THRU A24Q10		NOT ASSIGNED	
A24Q11	1853-0045	TRANSISTOR: SI PNP	
A24Q12	1853-0012	TRANSISTOR: SI PNP	
A24R1	0687-6811	R:FXD COMP 680 OHM 10% 1/2W	
A24R2	0687-1821	R:FXD COMP 1800 OHM 10% 1/2W	
A24R3	0687-2721	R:FXD COMP 2700 OHM 10% 1/2W	
A24R4	0757-0417	R:FXD MET FLM 562 OHM 1% 1/8W	
A24R5	0687-1041	R: FXD COMP 100K OHM 10% 1/2W	
A24R6	0687-2721	R: FXD COMP 2700 OHM 10% 1/2W	
A24R7	2100-3350	R: VAR COMP 250 OHM 30% 1/4W	
A24R8	0757-0417	R:FXD MET FLM 562 OHM 1% 1/8W	
A24R9	0687-3301	R:FXD COMP 33 OHM 10% 1/2W	
A24R10	0687-3301	R:FXD COMP 33 OHM 10% 1/2W	
A24R11	0687-6811	R:FXD COMP 680 OHM 10% 1/2W	
A24R12	0687-2221	R:FXD COMP 2200 OHM 10% 1/2W	
A24R13	0687-2721	R:FXD COMP 2700 OHM 10% 1/2W	
A24R14	0757-0417	R:FXD MET FLM 562 OHM 1% 1/8W	
A24R15	0687-1041	R: FXD COMP 100K OHM 10% 1/2W	
A24R16	0687-2721	R: FXD COMP 2700 OHM 10% 1/2W	
A24R17	2100-3350	R: VAR COMP 250 OHM 30% 1/4W	
A24R18	0757-0417	R:FXD MET FLM 562 OHM 1% 1/8W	
A24R19	0687-3301	R:FXD COMP 33 OHM 10% 1/2W	
A24R21	0812-0022	R: FXD .56Ω 10% 3W	
A24R22	0813-0029	R: FXD 1Ω 3% 3W	
C1, C2	0160-0018	C:FXD MY 0.22 UF 10% 400VDCW	
C3	0180-0058	C:FXD ELECT 50UF -10%+100% 25VDCW	
C4	0180-0028	C:FXD ELECT 2 X 1500 UF 15VDCW	
C5	0180-0028	C:FXD ELECT 2 X 1500 UF 15VDCW	
C6	0180-0057	C:FXD ELECT 1000UF 25VDCW	
C7	0180-0028	C:FXD ELECT 2 X 1500 UF 15VDCW	
C8	0180-0028	C:FXD ELECT 2 X 1500 UF 15VDCW	
C9	0180-0057	C:FXD ELECT 1000UF 25VDCW	
C10	0180-0056	C:FXD ELECT 1000 UF 50VDCW	

Table 6-1. Reference Designation Index (Cont'd)

Reference Designation	Stock No.	Description #	Note
C11	0180-0056	C:FXD ELECT 1000 UF 50VDCW	
C12	0180-0056	C:FXD ELECT 1000 UF 50VDCW	
C13	0180-0056	C:FXD ELECT 1000 UF 50VDCW	
C14	0170-0078	C: FXD 47 UF	
C15	0160-3333	C:FXD CER 5000 pF 20% 250 vdcw	
C16	0180-0143	C:FXD ELECT 2X500UF 25VDCW	
C17	310A-7C	CAPACITOR:VAR AIR 90-300 PF	
C18	0180-0057	C:FXD ELECT 1000UF 25VDCW	
C19	0180-0057	C:FXD ELECT 1000UF 25VDCW	
C20	0180-0057	C:FXD ELECT 1000UF 25VDCW	
C21	0160-0124	C:FXD POLY 0.864UF 0.115UF 0.735UF 0.09	
C22	0160-0124	C:FXD POLY 0.864UF 0.115UF 0.735UF 0.09	
C23	0160-0125	C:FXD POLY 2.08UF 0.278UF 0.304UF 0.040	
C24	0160-0125	C:FXD POLY 2.08UF 0.278UF 0.304UF 0.040	
DS1 THRU DS2	1450-0049	Light: Indicator (clear)	
DS4		NOT ASSIGNED	
DS5	2140-0027	LAMP:INCANDESCENT 24V 35-45 MA	
DS6	2140-0027	LAMP:INCANDESCENT 24V 35-45 MA	
DS7	2140-0027	LAMP:INCANDESCENT 24V 35-45 MA	
DS8	2140-0027	LAMP:INCANDESCENT 24V 35-45 MA	
DS9	2140-0027	LAMP:INCANDESCENT 24V 35-45 MA	
DS10	2140-0027	LAMP:INCANDESCENT 24V 35-45 MA	
DS11	2140-0027	LAMP:INCANDESCENT 24V 35-45 MA	
DS12	2140-0027	LAMP:INCANDESCENT 24V 35-45 MA	
DS13	2140-0027	LAMP:INCANDESCENT 24V 35-45 MA	
DS14	2140-0027	LAMP:INCANDESCENT 24V 35-45 MA	
DS15	2140-0027	LAMP:INCANDESCENT 24V 35-45 MA	
DS16	2140-0027	LAMP:INCANDESCENT 24V 35-45 MA	
DS17	2140-0027	LAMP:INCANDESCENT 24V 35-45 MA	
DS18	2140-0027	LAMP:INCANDESCENT 24V 35-45 MA	
DS19	2140-0027	LAMP:INCANDESCENT 24V 35-45 MA	
F1	2110-0201	FUSE: 0.25 amp slow blow	
J1A	1510-0107	BINDING POST: RED	
J1B	1510-0091	BINDING POST: BLACK	
J2	1251-0066	JACK:TELEPHONE 2-CONDUCTOR RECORDER	
J3	1250-0102	CONNECTOR:BNC OUTPUT	
J4	1251-2357	CONNECTOR:POWER 3 PIN MALE	
L1	310A-60C	COIL:ZERO SET	
L2	9140-0129	COIL:FXD RF 220 UH	
L3	9140-0129	COIL:FXD RF 220 UH	
M1	1120-0307 1120-0321	METER:Not used in Option 02 METER:OPTION 02 ONLY	
MP1	5060-0737	FRAME ASSY:10 X 16 FM	
MP2	00310-00204	PANEL: FRONT	
MP3	5060-0763	HANDLE ASSY-SIDE	
MP4	5060-8735	RETAINER-HANDLE ASSY	
MP5	5060-0767	FOOT ASSY:FM	
MP6		NOT ASSIGNED	
MP7		NOT ASSIGNED	
MP8		NOT ASSIGNED	
MP9		NOT ASSIGNED	

 # See list of abbreviations in introduction to this section

Table 6-1. Reference Designation Index (Cont'd)

Reference Designation	Stock No.	Description #	Note
MP10	5060-8589	TOP COVER ASSY: 16 L FM	
MP11	5060-8713	BOTTOM COVER ASSY: 16 L FM	
MP12	310A-2E	PANEL:REAR HALF RECESS	
MP13	310A-2C	PANEL:REAR HALF UNRECESSED	
P1		N.S.R. PART OF W1	
P2		NOT ASSIGNED	
P3		NOT ASSIGNED	
P4		N.S.R PART OF W1	
Q1	1853-0053	TRANSISTOR: SI PNP	
Q2	1853-0053	TRANSISTOR: SI PNP	
Q3	1853-0053	TRANSISTOR: SI PNP	
Q4	1853-0053	TRANSISTOR: SI PNP	
R1	2100-0076	R:VAR COMP 75 OHM 10% LIN 2W	
R2	0757-0034	R:FXD MET FLM 500 OHM 1% 1/2W	
R3	2100-0019	R:VAR COMP 500 OHM 10% LIN 1/2W	
R4	0757-0982	R: FXD MET FLM 245 KΩ 1%	
R5	0683-4755	R: FXD COMP 4.7 MΩ 5% 1/4W	
R10	2100-0234	R: VAR COMP 10K OHM 20% LIN 2W	
R14		NOT ASSIGNED	
R15	0813-0028	R:FXD WW 1 OHM 10% 1W	
R16 THRU			
R19		NOT ASSIGNED	
R20	0687-3331	R:FXD COMP 33K OHM 10% 1/2W	
R21	0812-0022	R: FXD WW 0.56 OHM 5% 3W	
R22	0813-0029	R: FXD WW 1 Ω 10%	
R23 THRU			
R61		NOT ASSIGNED	
R62	0757-0280	R:FXD MET FLM 1K OHM 1% 1/8W	
S1		NOT ASSIGNED	
S2	3101-0011	SWITCH:SLIDE DPDT	
S3	3101-0037	SWITCH:TOGGLE SPST	
S4 THRU			
S23		NOT ASSIGNED	
S24	3101-0038	SWITCH:TOGGLE DPDT	
S25	3101-1234	SWITCH:SLIDE DPDT	
S26 THRU			
S49		NOT ASSIGNED	
S50	3101-0051	SWITCH:PUSHBUTTON DPDT OPTION 01 MARKER	
T1	9100-0168	TRANSFORMER:POWER	
W1	8120-1348	CABLE ASSY:POWER CORD	
XA	1251-0194	CONNECTOR:PRINTED CIRCUIT 15-CONTACT	
XF1	1400-0084	FUSEHOLDER	
XY51	1200-0020	SOCKET:OCTAL BASE	
Y1 THRU			
Y50		NOT ASSIGNED	
Y51	0410-0088	CRYSTAL:QUARTZ 100KC OPTION 01 ONLY	
		MISCELLANEOUS	
	0370-0063	KNOB:REF ADJUST	
	0370-0037	KNOB,BLK CONCENTRIC 1 IN. OD 17/64 IN H	
	0370-0035	KNOB:RANGE BANDWIDTH MODE	
	0370-0028	KNOB:COURSE FREQUENCY ZERO SET	
	0370-0026	KNOB,BLK W/ARROW 3/4 IN. OD 1/8 IN. SHA	
	0370-0025	KNOB:BLACK,OFFSET	

See list of abbreviations in introduction to this section

Table 6-1. Reference Designation Index (Cont'd)

Reference Designation	Stock No.	Description #	Note
	1520-0001	PLATE:MOUNTING ELECTROLYTIC CAPACITOR	
	1460-0060	SPRING:LEAF	
	1460-0115	SPRING:LEAF	
	1450-0053	LAMPHOLDER:INDICATOR 12 SOCKET	
	1490-0030	STAND:TILT	
	1500-0002	YOKE:COUPLER BANDWIDTH SWITCH	
	1400-0033	CLAMP:TUBE OPTION 01 ONLY	
	1200-0043	INSULATOR:TRANSISTOR	
	1200-0081	BUSHING:INSULATOR TRANSISTOR	
	0340-0090	INSULATOR:BINDING POST	
	0340-0089	INSULATOR:BINDING POST SINGLE	
	0510-0123	FASTENER:PUSH-ON TYPE	
	5000-0748	COVER:SIDE 10 X 16 FM	
	5060-0049	BOARD:EXTENDER ASSY	
	5060-0222	Handle	
	6960-0001	Button: Plug, not on Option 01	
	310A-99A	WINDOW:RANGE	
	00310-48801	WASHER: OUTPUT CONNECTOR	
	00310-200	LAMPHOLDER: INDICATOR 3 SOCKET	
	00310-602	Main Gear Assembly	
	1500-0253	Coupler: Hub	
	1500-0004	Insulator: Coupler	

See list of abbreviations in introduction to this section

Table 6-2. Replaceable Parts

Stock No.	Description #	Mfr.	Mfr. Part No.	TQ	RS
0121-0031	C:VAR AIR 1.85-10.38 PF	28480	0121-0031	1	
0121-0038	C:VAR AIR 1.8-4.6 PF	74970	160-303	3	
0121-0142	C: var 16-150 pF 175 vdcw	72136	obd	5	
0121-0147	C:VAR air 2-19.3 pF	74970	189-507-5	5	
0121-0199	C:VAR mica 110-580 pF 175 vdcw	72136	T52717-3	2	
0121-0426	C:VAR CER 50-380 pF	72136	T52517-7	4	
0121-0427	C:VAR 170-780 pF 175 vdcw	72136	T52917-6	6	
0122-0015	Varicapacitor: Glass 150 pF 10 wiv	28480	0122-0015	2	
0130-0006	C:VAR cer 5-20 pF N300	28480	0130-0006	1	
0132-0003	C:VAR POLY 0.7-3.0 PF	28480	0132-0003	1	
0140-0010	C:FXD MICA 820 PF 10%	28480	0140-0010	1	
0140-0017	C:FXD MICA 4700 PF 10%	28480	0140-0017	4	
0140-0018	C:FXD MICA 1000 PF 5%	28480	0140-0018	1	
0140-0024	C:FXD MICA 2200 PF 10% 500VDCW	28480	0140-0024	1	
0140-0040	C: fxd mica 75 pF 5% 500vdcw	28480	0140-0040	1	
0140-0071	C:FXD 5600 pF 1%	72136	obd	1	
0140-0090	C:FXD MICA 200 PF 5%	28480	0140-0090	1	
0140-0091	C:FXD MICA 820 PF 5% 500VDCW	28480	0140-0091	1	
0140-0109	C:FXD MICA 209 PF 2% 300VDCW	28480	0140-0109	1	
0140-0110	C:FXD MICA 127 PF 2% 300VDCW	28480	0140-0110	1	
0140-0111	C:FXD MICA 101.4 PF 2% 500VDCW	28480	0140-0110	3	
0140-0144	C:FXD MICA 18 PF 0.5%	28480	0140-0144	1	
0140-0150	C:FXD MICA 731.5 PF 1% 300VDCW	28480	0140-0150	1	
0140-0155	C:FXD MICA 1325 PF 1% 500VDCW	28480	0140-0155	1	
0140-0163	C:FXD MICA 4751 PF 1% 300VDCW	28480	0140-0163	1	
0140-0175	C:FXD MICA 39PF 2% 300VDCW	28480	0140-0175	1	
0140-0180	C:FXD MICA 2000PF 2% 300VDCW	28480	0140-0180	1	
0140-0182	C:FXD MICA 5000 PF 2%	28480	0140-0182	2	
0140-0184	C:FXD MICA 8200 PF 1% 100VDCW	28480	0140-0184	1	
0140-0196	C: fxd mica 150 pF 5%	28480	0140-0196	1	
0140-0197	C:FXD MICA 180 pF 5% 300 vdcw	04062	RDM15F181J3C	1	
0140-0201	C:FXD MICA 12 pF 5%	14655	obd	1	
0140-0202	C:FXD MICA 15 pF 5%	14655	obd	1	
0140-0204	C:FXD MICA 47 pF 5% NPO 500 vdcw	04062	RDM15E470J5C	1	
0140-0225	C:FXD MICA 300 pF 1%	28480	0140-0225	1	
0140-0228	C: fxd mica 360 pF 1% 300 vdcw	28480	0140-0228	1	
0150-0012	C:FXD CER 0.01 UF 20% 1000VDCW	56289	29C214A3	4	
0150-0024	C:FXD CER 0.02 UF ±80-20% 600VDCW	71590	TYPE DD 203	2	
0150-0058	C:FXD CER 2.2/0.25 PF 600VDCW	72982	301-000-COJO-229C	1	
0150-0084	C:FXD CER 0.1 UF +80-20% 50VDCW	56289	33C41	7	
0150-0093	C:FXD CER 0.01 UF +80-20% 100VDCW	91418	TA	1	
0150-0096	C:FXD CER 0.05 UF +80-20% 100VDCW	91418	TA	29	
0160-0018	C:FXD MY 0.22 UF 10% 400VDCW	28480	0160-0018	2	
0160-0124	C:FXD POLY 0.864UF 0.115UF 0.735UF 0.09	28480	0160-0124	2	
0160-0125	C:FXD POLY 2.08UF 0.278UF 0.304UF 0.040	28480	0160-0125	2	
0160-0127	C:FXD CER 1UF 20% 25VDCW	56289	5C13	2	
0160-0139	C:FXD MICA 270PF 2% 300VDCW	14655	RDM19E271G3S	2	
0160-0174	C:FXD CER 0.47 UF +80-20% 25VDCW	56289	5C11B7	4	
0160-0186	C:FXD MICA 10.7+/-0.25PF 300VDCW	28480	0160-0186	2	
0160-0187	C:FXD MICA 42PF 1% 300VDCW	04062	RDM19C420F3C	3	
0160-0188	C:FXD MICA 53PF 5% 300VDCW	04062	RDM19C530J3C	1	
0160-0189	C:FXD MICA 73PF 1% 300VDCW	04062	RDM19C730F3C	2	
0160-0190	C:FXD MICA 225PF 1% 300VDCW	04062	RDM19E(225QF3C	2	
0160-0191	C:FXD MICA 272PF 1% 300VDCW	04062	RDM19E(272QF3C	2	
0160-0192	C:FXD MICA 525PF 5% 300VDCW	04062	RDM19E(525QJ3C	1	

See list of abbreviations in introduction to this section

Table 6-2. Replaceable Parts (Cont' d)

Stock No.	Description #	Mfr.	Mfr. Part No.	TQ	RS
0160-3622	C: FXD .1 UF +80-20% 100 wvdc CER	28480	0160-3622		
0160-0193	C:FXD MICA 1125PF 5% 300VDCW	04062	RDM19F(1125QJ3C	3	
0160-0203	C:FXD MICA 150 pF 1% 300 vdcw	28480	0160-0203	2	
0160-0362	C:FXD MICA 510 pF 5%	28480	0160-0362	2	
0160-0763	C:FXD MICA 5 pF 10%	14655	obd	1	
0160-2056	C:FXD MY 0.22 UF 20% 200VDCW	56289	224P22402	2	
0160-3333	C: fxd 5000 pF 20% 250 vdcw	08988	THD-8502M	1	
0170-0018	C:FXD MY 1UF 5% 200VDCW	84411	TYPE 621M 10552	1	
0170-0055	C:FXD MY 0.1UF 20% 200VDCW	56289	192P10402	1	
0170-0064	C:FXD MY 0.47UF 10% 100VDCW	24446	64F40AA474	1	
0170-0066	C:FXD MY 0.027UF 10% 200VDCW	28480	0170-0066	1	
0170-0085	C:FXD MY 0.1UF 20% 50VDCW	84411	601PE STYLE 3	1	
0170-0078	C: FXD .47 UF +-5% 150 wvdc	84411	663UW474515		
0180-0028	C:FXD ELECT 2 X 1500 UF 15VDCW	56289	D32442	4	
0180-0033	C:FXD ELECT 50UF 6VDCW	56289	30D506G006CB4M1	5	
0180-0045	C:FXD ELECT 20UF 25VDCW	56289	30D206-G0-25DB-6M1	2	
0180-0056	C:FXD ELECT 1000 UF 50VDCW	56289	D32429	4	
0180-0057	C:FXD ELECT 1000UF 25VDCW	56289	D32606	5	
0180-0058	C:FXD ELECT 50UF -10%+100% 25VDCW	56289	30D506G025DD4M1	13	
0180-0059	C:FXD ELECT 10 UF +75-10% 25VDCW	28480	0180-0059	4	
0180-0060	C:FXD ELECT 200UF -10%+100% 3VDCW	56289	30D207G003DC4	3	
0180-0061	C:FXD ELECT 100UF +100%-10% 15VDCW	56289	30107G015DD4	2	
0180-0076	C:FXD ELECT 20UF 25VDCW	56289	40D206G025DC6M1	1	
0180-0104	C:FXD ELECT 200UF 15VDCW	56289	30D207G015DH4	3	
0180-0111	C:FXD ELECT 2UF 25VDCW	56289	40D205G025BB4M1	1	
0180-0124	C:FXD ELECT 200UF 6VDCW	56289	30D207G006DF4	1	
0180-0143	C:FXD ELECT 2X500UF 25VDCW	56289	D36536	1	
0180-0144	C:FXD ELECT 200UF -10+100% 25VDCW	56289	41D D36506	2	
0180-0145	C:FXD ELECT 500 UF +100-10% 10VDCW	56289	TYPE 41D D37646	1	
0340-0089	INSULATOR:BINDING POST, SINGLE	28480	0340-0089	1	
0340-0090	INSULATOR:BINDING POST, DOUBLE	28480	0340-0090	1	
0370-0025	KNOB:BLACK,OFFSET	28480	0370-0025	1	
0370-0026	KNOB:BLK W/ARROW 3/4 IN. OD 1/8 IN. SHA	28480	0370-0026	1	
0370-0028	KNOB:ROUND BLACK 1" DIA	28480	0370-0028	1	
0370-0035	KNOB:SKIRTED BAR 1" DIA	28480	0370-0035	1	
0370-0037	KNOB:BLK CONCENTRIC 1 IN. OD 17/64 IN H	28480	0370-0037	1	
0370-0063	KNOB:ROUND RED 3/4" DIA	28480	0370-0063	1	
0410-0025	CRYSTAL:QUARTZ 3.0 MC	28480	0410-0025	2	
0410-0088	CRYSTAL:QUARTZ 100KC	28480	0410-0088	1	
0490-0044	RELAY:REED SPST 1/8A 4W	28480	0490-0044	1	
0510-0123	FASTENER:PUSH-ON TYPE	78553	C12008-014-4	1	
0683-1225	R:FXD COMP 1200 OHM 5% 1/4W	01121	CB 1225	2	
0683-6825	R:FXD COMP 6800 OHM 5% 1/4W	01121	CB 6825	1	
0683-4755	R: FXD COMP 4.7 MΩ 5% 1/4W	01121	CB 4755		
0684-1011	R:FXD COMP 100 OHM 10% 1/4W	01121	CB 1011	1	
0684-1021	R:FXD COMP 1000 OHM 10% 1/4W	01121	CB 1021	1	
0684-1031	R:FXD COMP 10K OHM 10% 1/4W	01121	CB 1031	4	
0684-4711	R:FXD COMP 470 OHM 10% 1/4W	01121	CB 4711	1	
0684-4721	R:FXD COMP 4700 OHM 10% 1/4W	01121	CB 4721	6	
0686-3305	R:FXD COMP 33 OHM 5% 1/2W	01121	EB 3305	1	
0687-1011	R:FXD COMP 100 OHM 10% 1/2W	01121	EB 1011	8	
0687-1021	R:FXD COMP 1000 OHM 10% 1/2W	01121	EB 1021	5	
0687-1031	R:FXD COMP 10K OHM 10% 1/2W	01121	EB 1031	5	
0687-1041	R:FXD COMP 100K OHM 10% 1/2W	01121	EB 1041	4	
0687-1211	R:FXD COMP 120 OHM 10% 1/2W	01121	EB 1211	1	
0687-1221	R:FXD COMP 1200 OHM 10% 1/2W	01121	EB 1221	2	
0687-1231	R:FXD COMP 12K OHM 10% 1/2W	01121	EB 1231	1	
0687-1511	R:FXD COMP 150 OHM 10% 1/2W	01121	EB 1511	1	

See list of abbreviations in introduction to this section

Table 6-2. Replaceable Parts (Cont'd)

Stock No.	Description #	Mfr.	Mfr. Part No.	TQ	RS
0687-1521	R:FXD COMP 1500 OHM 10% 1/2W	01121	EB 1521	2	
0687-1531	R:FXD COMP 15K OHM 10% 1/2W	01121	EB 1531	4	
0687-1811	R:FXD COMP 180 OHM 10% 1/2W	01121	EB 1811	3	
0687-1821	R:FXD COMP 1800 OHM 10% 1/2W	01121	EB 1821	2	
0687-1831	R:FXD COMP 18K OHM 10% 1/2W	01121	EB 1831	2	
0687-2201	R:FXD COMP 22 OHM 10% 1/2W	01121	EB 2201	3	
0687-2211	R:FXD COMP 220 OHM 10% 1/2W	01121	EB 2211	3	
0687-2221	R:FXD COMP 2200 OHM 10% 1/2W	01121	EB 2221	4	
0687-2701	R:FXD COMP 27 OHM 10% 1/2W	01121	EB 2701	3	
0687-2231	R: FXD COMP 22 KΩ 10% 1/2W	01121	EB 2231		
0687-2721	R:FXD COMP 2700 OHM 10% 1/2W	01121	EB 2721	4	
0687-2731	R:FXD COMP 27K OHM 10% 1/2W	01121	EB 2731	2	
0687-2741	R: fxd 270K ohm 10% 1/2W	01121	obd	1	
0687-3301	R:FXD COMP 33 OHM 10% 1/2W	01121	EB 3301	2	
0687-3311	R:FXD COMP 330 OHM 10% 1/2W	01121	EB 3311	6	
0687-3321	R:FXD COMP 3300 OHM 10% 1/2W	01121	EB 3321	5	
0687-3331	R:FXD COMP 33K OHM 10% 1/2W	01121	EB 3331	2	
0687-3341	R:FXD COMP 330K OHM 10% 1/2W	01121	EB 3341	1	
0687-3921	R:FXD COMP 3900 OHM 10% 1/2W	01121	EB 3921	1	
0687-4701	R:FXD COMP 47 OHM 10% 1/2W	01121	EB 4701	2	
0687-4711	R:FXD COMP 470 OHM 10% 1/2W	01121	EB 4711	1	
0687-4721	R:FXD COMP 4700 OHM 10% 1/2W	01121	EB 4721	11	
0687-5611	R:FXD COMP 560 OHM 10% 1/2W	01121	EB 5611	1	
0687-5621	R:FXD COMP 5600 OHM 10% 1/2W	01121	EB 5621	5	
0687-6801	R:FXD COMP 68 OHM 10% 1/2W	01121	EB 6801	2	
0687-6811	R:FXD COMP 680 OHM 10% 1/2W	01121	EB 6811	4	
0687-8211	R:FXD COMP 820 OHM 10% 1/2W	01121	EB 8211	5	
0690-1021	R:FXD COMP 1000 OHM 10% 1W	01121	GB 1021	1	
0698-0087	R:FXD MET FLM 316 OHM 1% 1/4W	28480	0698-0087	1	
0698-3203	R:FXD MET FLM 4530 OHM 1% 1/4W	28480	0698-3203	1	
0698-3206	R:FXD MET FLM 2260 OHM 1% 1/4W	28480	0698-3206	1	
0698-3122	R: FXD MET FLM 412 OHM 1% 1/4W	28480	0698-3122	1	
0698-3217	R: fxd flm 24.9K ohm 1% 1/4W	19701	obd	1	
0698-3222	R: fxd flm 20.5K ohm 1% 1/4W	28480	0698-3222	1	
0698-4195	R: fxd flm 1.02K ohm 1% 1/8W	14674	obd	2	
0698-5193	R: fxd 63.45 ohm .5% 1.8W	91637	obd	1	
0698-5408	R: fxd flm 1.111K ohm .25% 1/8W	91637	obd	1	
0698-5412	R: fxd flm 4.624K ohm .25% 1/8W	91637	obd	1	
0698-5487	R: fxd met flm 90K ohm 5% 1/2W	75042	obd	1	
0698-5519	R: fxd 100K ohm .05% 1/2W	91637	obd	1	
0727-0002	R:FXD DEPC 3.0 OHM 1% 1/2W	28480	0727-0002	1	
0727-0004	R:FXD DEPC 5 OHM 1% 1/2W	28480	0727-0004	1	
0727-0027	R:FXD DEPC 53.3 OHM 1% 1/2W	28480	0727-0027	1	
0727-0101	R:FXD DEPC 1.03K OHM 1% 1/2W	28480	0727-0101	1	
0727-0109	R:FXD DEPC 1470 OHM 1% 1/2W	28480	0727-0109	1	
0727-0116	R:FXD DEPC 2030 OHM 1% 1/2W	28480	0727-0116	2	
0727-0412	R:FXD CARBON 21.5K OHM 1% 1/2W	28480	0727-0412	1	
0727-0413	R:FXD DEPC 99.7K OHM 1% 1/2W	28480	0727-0413	1	
0727-0414	R:FXD DEPC 96.8K OHM 1% 1/2W	28480	0727-0414	1	
0727-0416	R:FXD DEPC 69.0 OHM 1/2% 1/2W	28480	0727-0416	1	
0727-0418	R:FXD DEPC 43.7 OHM 1/2% 1/2W	28480	0727-0418	1	
0727-0487	R:FXD CARBON 20.1 OHM 1/2% 1/2W	28480	0727-0487	1	
0727-0488	R:FXD CARBON 326 OHM 1/2% 1/2W	28480	0727-0488	1	
0757-0034	R:FXD MET FLM 500 OHM 1% 1/2W	28480	0757-0034	1	
0757-0069	R:FXD MET FLM 121 OHM 1% 1/4W	28480	0757-0069	2	
0757-0125	R:FXD MET FLM 98.8K OHM 1% 1/10W	28480	0757-0125	1	

 # See list of abbreviations in introduction to this section

Table 6-2. Replaceable Parts (Cont'd)

Stock No.	Description #	Mfr.	Mfr. Part No.	TQ	RS
0757-0139	R:FXD MET FLM 1.1 MEGOHM 2% 1/2W	28480	0757-0139	1	
0757-0143	R:FXD MET FLM 332K OHM 1% 1/4W	28480	0757-0143	1	
0757-0158	R:FXD MET FLM 619 OHM 1% 1/2W	28480	0757-0158	8	
0757-0159	R:FXD MET FLM 1000 OHM 1% 1/2W	28480	0757-0159	24	
0757-0280	R:FXD MET FLM 1K OHM 1% 1/8W	28480	0757-0280	1	
0757-0341	R:FXD MET FLM 30.1K OHM 1% 1/4W	28480	0757-0341	1	
0757-0351	R:FXD MET FLM 402 OHM 1% 1/4W	28480	0757-0351	2	
0757-0354	R:FXD MET FLM 3650 OHM 1% 1/4W	28480	0757-0354	1	
0757-0417	R:FXD MET FLM 562 OHM 1% 1/8W	28480	0757-0417	4	
0757-0440	R:fxd flm 7.5K ohm 1% 1/8W	14674	obd	1	
0757-0498	R:FXD MET FLM 24.3 OHM 1% 1/4W	28480	0757-0498	2	
0757-0702	R:FXD MET FLM 36.5 OHM 1% 1/4W	28480	0757-0702	2	
0757-0718	R:FXD MET FLM 200 OHM 1% 1/4W	28480	0757-0718	1	
0757-0734	R:FXD MET FLM 1.21K OHM 1%/1/4W	28480	0757-0734	2	
0757-0739	R:FXD MET FLM 2000 OHM 1% 1/4W	28480	0757-0739	5	
0757-0744	R:fxd flm 3.92K ohm 1% 1/4W	14674	obd	1	
0757-0750	R:FXD MET FLM 6810 OHM 1% 1/4W	28480	0757-0750	1	
0757-0751	R:FXD MET FLM 7500 OHM 1% 1/4W	28480	0757-0751	1	
0757-0753	R:FXD MET FLM 9090 OHM U% 1/4W	28480	0757-0753	3	
0757-0757	R:FXD MET FLM 15K OHM 1% 1/4W	28480	0757-0757	1	
0757-0824	R:FXD MET FLM 2000 OHM 1% 1/2W	28480	0757-0824	4	
0757-0982	R: FXD MET FLM 245 KΩ 1%	19701	MF7C1/2-TO-2453-F		
0757-1004	R:FXD MET FLM 53.27 OHM 1/4% 1/2W	28480	0757-1004	2	
0757-1005	R: FXD MET FLM 61.11 OHM 1/4% 1/2W	28480	0757-1005	4	
0757-1006	R:FXD MET FLM 71.15 OHM 1/4% 1/2W	28480	0757-1006	3	
0757-1007	R:FXD MET FLM 96.25 OHM 1/4% 1/2W	28480	0757-1007	4	
0757-1008	R:FXD MET FLM 247.5 OHM 1/4% 1/2W	28480	0757-1008	6	
0757-1009	R:FXD MET FLM 790 OHM 1/4% 1/2W	28480	0757-1009	1	
0757-1020	R:FXD MET FLM 133 OHM 1% 1/4W	28480	0757-1020	1	
0757-1023	R:FXD MET FLM 6040 OHM 1% 1/4W	28480	0757-1023	1	
0757-1040	R:FXD MET FLM 50 OHM 1% 1/4W	28480	0757-1040	1	
0757-1068	R:FXD MET FLM 313.5 OHM 1% 1/2W	28480	0757-1068	2	
0757-1077	R:FXD MET FLM 15.5K OHM 1%1/2W	28480	0757-1077	1	
0758-0002	R:FXD MET OX FLM 560 OHM 5% 1/2W	28480	0758 0002	1	
0758-0003	R:FXD MET OX 1000 OHM 5% 1/2W	28480	0758-0003	5	
0758-0004	R:FXD MET OX 2700 OHM 5% 1/2W	28480	0758-0004	1	
0758-0005	R:FXD MET OX 4700 OHM 5% 1/2W	28480	0758-0005	6	
0758-0006	R:FXD MET OX 10K OHM 5% 1/2W	28480	0758-0006	4	
0758-0010	R:FXD MET OX FLM 3300 OHM 5% 1/2W	28480	0758-0010	2	
0758-0012	R:FXD MET OX 12K OHM 5% 1/2W	28480	0758-0012	1	
0758-0017	R:FXD MET OX 1500 OHM 5% 1/2W	28480	0758-0017	3	
0758-0019	R:FXD MET OX 18K OHM 5% 1/2W	28480	0758-0019	4	
0758-0021	R:FXD MET OX 51K OHM 5% 1/2W	28480	0758-0021	1	
0758-0024	R:FXD MET OX 100 OHM 5% 1/2W	28480	0758-0024	1	
0758-0025	R:FXD MET OX 160 OHM 5% 1/2W	28480	0758-0025	1	
0758-0030	R:FXD MET OX 510 OHM 5% 1/2W	28480	0758-0030	1	
0758-0031	R:FXD MET OX 680 OHM 5% 1/2W	28480	0758-0031	1	
0758-0032	R:FXD MET OX 820 OHM 5% 1/2W	28480	0758-0032	2	
0758-0033	R:FXD MET OX 2000 OHM 5% 1/2W	28480	0758-0033	1	
0758-0034	R:FXD MET OX 2400 OHM 5% 1/2W	28480	0758-0034	2	
0758-0035	R:FXD MET OX 3000 OHM 5% 1/2W	28480	0758-0035	1	
0758-0037	R:FXD MET OX 5100 OHM 5% 1/2W	28480	0758-0037	3	
0758-0038	R:FXD MET OX 9100 OHM 5% 1/2W	28480	0758-0038	2	
0758-0039	R:FXD MET OX 20K OHM 5% 1/2W	28480	0758-0039	2	
0758-0040	R:FXD MET OX 47K OHM 5% 1/2W	28480	0758-0040	2	
0758-0044	R:FXD MET OX 2200 OHM 5% 1/2W	28480	0758-0044	5	

See list of abbreviations in introduction to this section

Table 6-2. Replaceable Parts (Cont'd)

Stock No.	Description #	Mfr.	Mfr. Part No.	TQ	RS
0758-0048	R: FXD MET FLM 8.2K 1%	24546	C5-1/4-TO-8201-F		
0758-0046	R:FXD MET OX 6200 OHM 5% 1/2W	28480	0758-0046	1	
0758-0047	R:FXD MET OX 7500 OHM 5% 1/2W	28480	0758-0047	2	
0758-0049	R:FXD MET OX 33K OHM 5% 1/2W	28480	0758-0049	4	
0758-0050	R:FXD MET OX 39K OHM 5% 1/2W	28480	0758-0050	1	
0758-0051	R:FXD MET OX 43K OHM 5% 1/2W	28480	0758-0051	1	
0758-0054	R:FXD MET OX 330 OHM 5% 1/2W	28480	0758-0054	1	
0758-0055	R:FXD MET OX 360 OHM 5% 1/2W	28480	0758-0055	1	
0758-0057	R:FXD MET OX 5600 OHM 5% 1/2W	28480	0758-0057	1	
0758-0062	R:FXD MET OX 200 OHM 5% 1/2W	28480	0758-0062	1	
0758-0068	R:FXD flm 910 ohm 5% 1/4W	14674	obd	1	
0758-0070	R:fxd met ox 1200 ohm 5% 1/2W	28480	0758-0070	2	
0758-0071	R:FXD MET OX 4300 OHM 5% 1/2W	28480	0758-0071	1	
0758-0072	R:FXD MET OX 16K OHM 5% 1/2W	28480	0758-0072	2	
0758-0073	R:FXD MET OX 24K OHM 5% 1/2W	28480	0758-0073	3	
0758-0074	R:FXD MET OX 27K OHM 5% 1/2W	28480	0758-0074	2	
0758-0076	R:FXD MET OX 68K OHM 5% 1/2W	28480	0758-0076	1	
0758-0078	R:fxd met ox 13K ohm 5% 1/2W	28480	0758-0078	3	
0758-0079	R:fxd met ox 30K ohm 5% 1/2W	28480	0758-0079	2	
0812-0019	R:fxd ww 0.33 ohm 5% 3W	28480	0812-0019	1	
0812-0022	R:fxd ww 0.56 ohm 5% 3W	28480	0812-0022	1	
0813-0028	R:fxd ww 1 ohm 10% 1W	28480	0813-0028	1	
1120-0307	Meter: 0-1 mA	28480	1120-0307	1	
1120-0321	Meter (Option 02 only)	28480	1120-0321	1	
0813-0029	R: FXD 1Ω 3% 3W PW	07088	KM-300		
1200-0020	SOCKET:OCTAL BASE	71785	101-12-11-046	1	
1200-0043	INSULATOR:TRANSISTOR MOUNTING	71785	293011	1	
1200-0081	BUSHING:INSULATOR NYLON	26365	974SPECIAL	1	
1250-0102	CONNECTOR:BNC	28480	1250-0102	1	
1251-0066	JACK:TELEPHONE 2-CONDUCTOR	82389	2J-1339	1	
1251-0148	CONNECTOR:POWER 3 PIN MALE	60427	H-1061-2	1	
1251-0194	CONNECTOR:PRINTED CIRCUIT 15-CONTACT	28480	1251-0194	1	
1251-2357	Connector: Power 3 pin male	82389	obd	1	
1400-0033	Clamp: Tube	91506	120D5-63AHS	1	
1400-0084	Fuseholder	28480	1400-0084	1	
1450-0049	Light: Indicator clear	72765	obd	1	
1450-0053	LAMPHOLDER:INDICATOR 12 SOCKET	82219	81250	1	
1460-0060	SPRING:LEAF	28480	1460-0060	1	
1460-0115	SPRING:LEAF PHOSPHOR BRONZE	28480	1460-0115	1	
1490-0030	STAND:TILT	28480	1490-0030	1	
				1	
1500-0004	INSULATOR: COUPLER	28480	1500-0004	1	
1500-0253	COUPLER: HUB	28480	1500-0253	1	
1510-0107	BINDING POST: RED	28480	1510-0107	1	
1510-0091	BINDING POST: BLACK	28480	1510-0091	4	
1520-0001	PLATE: MOUNTING ELECTROLYTIC CAP	28480	1520-0091	4	
1850-0038	TRANSISTOR: PNP GERMANIUM	86684	1850-0038	2	
1850-0040	TRANSISTOR: PNP GERMANIUM	28480	1850-0040	16	
1853-0012	TRANSISTOR: PNP 2N2904A SI	01295	2N2904A		
				2	
1851-0017	TRANSISTOR:2N1304	01295	2N1304	1	
1853-0003	Transistor: PNP silicon F 50 mc min	28480	1853-0003	1	
1853-0020	TRANSISTOR: PNP Si	01295	SKA1123	23	
1854-0003	TRANSISTOR:NPN SILICON	28480	1854-0003	8	
1854-0011	TRANSISTOR:2N835 NPN SILICON	04713	2N835	2	
1901-0025	DIODE:SILICON 100WV 100MA	28480	1901-0025	8	
1901-0028	DIODE:SILICON 400 PIV 0.5 AMP	28480	1901-0028	4	
1901-0040	DIODE: SILICON 30WV	28480	1901-0040	38	
1901-0158	DIODE: SILICON 200 piv	04713	SR1358-3	2	
1901-0179	DIODE: SILICON	14433	obd	4	
1902-0009	DIODE: BREAKDOWN 7.5V 10% 400mW	28480	1902-0009	1	
1853-0045	TRANSISTOR: PNP 2N4036 SI	02735	2N4036		
1853-0053	TRANSISTOR: PNP SI	28480	1853-0053		
1853-0066	TRANSISTOR: PNP SI	28480	1853-0066		

See list of abbreviations in introduction to this section

Table 6-2. Replaceable Parts (Cont'd)

Stock No.	Description #	Mfr.	Mfr. Part No.	TQ	RS
1902-0025	DIODE,BREAKDOWN:10.0V 5% 400 MW	28480	1902-0025	1	
1902-0048	Diode: Breakdown 6.81V 5% 400 mW	04713	SZ10939-134	3	
1902-0227	DIODE,BREAKDOWN:22.6V 5% 1.5W	28480	1902-0227	2	
1910-0016	DIODE:GERMANIUM 1COMA AT 0.85V 60PIV	28480	1910-0016	13	
2100-0019	R:VAR COMP 500 OHM 10% LIN 1/2W	28480	2100-0019	1	
2100-0076	R: var 75 ohm 10% 2.25W	01121	obd	1	
2100-0234	R: var 10K ohm 20% 2.25W	01121	obd	1	
2100-0360	R:VAR COMP 250 OHM 30% 1/4W	28480	2100-0360	4	
2100-3350	R: VAR 200 OHM 10%	73138	72XR200		
2100-0361	R:VAR COMP 2000 OHM 30% LIN 1/8W	28480	2100-0361	6	
2100-0362	R:VAR COMP 100K OHM 30% LIN 1/4W	28480	2100-0362	2	
2100-0408	R:VAR COMP 250 OHM 30% 1/2W	28480	2100-0408	1	
2110-0018	FUSE:CARTRIDGE 0.25 AMP SLOW BLOW	75915	313.250	1	
2110-0201	Fuse: 0.25 A slow blow	71400	MDL-1/4	1	
2140-0027	LAMP:INCANDESCENT 24V 35-45 MA	94991	24ESB	15	
310A-60C	COIL:ZERO SET	28480	310A-60C	1	
3100-0359	SWITCH:ROTARY 8 SECT 9 POS	28480	3100-0359	1	
3100-0360	SWITCH:ROTARY 4 SECT 8 POS	28480	3100-0360	1	
3100-0361	SWITCH:ROTARY 2 SECT 8 POS	28480	3100-0361	1	
3100-0363	SWITCH:ROTARY 2 SECT 3 POS	28480	3100-0363	1	
3100-1589	SWITCH:ROTARY 3 SECT 6 POS	28480	3100-1589	1	
3101-0011	SWITCH:SLIDE DPDT	42190	4603G1	1	
3101-0033	SWITCH:SLIDE DPDT	79727	6510 C	1	
3101-0037	SWITCH:TOGGLE SPST	04009	83050-E	1	
3101-0038	SWITCH:TOGGLE DPDT	04009	83054-H	1	
3101-0051	SWITCH:PUSHBUTTON DPDT MOMENTARY	82389	3S-1431 LESS HDWE	1	
3101-1234	Switch: slide DPDT	28480	3101-1234	1	
5000-8729	COVER: SIDE 10 x 16 FM	28480	5000-8729	1	
5060-0049	BOARD: EXTENDER ASSY	28480	5060-0049	1	
5060-0222	HANDLE	28480	5060-0222	2	
5060-0737	FRAME ASSY: 10 x 16 FM	28480	5060-0737	1	
5060-8589	TOP COVER ASSY: 16L FM	28480	5060-8589	1	
5060-8713	BOTTOM COVER ASSY: 16L FM	28480	5060-8713	1	
5060-0763	HANDLE ASSY - SIDE	28480	5060-0763	1	
5060-8735	RETAINER - HANDLE ASSY	28480	5060-8735	1	
5060-0767	FOOT ASSY:FM	28480	5060-0767	1	
				1	
6960-0001	BUTTON:PLUG	28480	6960-0001	1	
8120-0078	CABLE ASSY:POWER CORD	28480	8120-0078	1	
8120-1348	Cable Assy: Power cord	70903	KHS-7041	1	
9100-0168	TRANSFORMER:POWER	28480	9100-0168	1	
9140-0029	COIL:RF CHOKE 100 MH	99848	3100-15-101	7	
9140-0032	COIL:FXD 10 UHY	28480	9140-0032	1	
9140-0053	CHOKE/COIL:FXD 1 MH 10%	99848	31000-15-102	2	
9140-0061	COIL:VAR 0.780-1.25 UHY	28480	9140-0061	1	
9140-0072	COIL:RF 5000 UH 10%	95265	SA-5000-I	4	
9140-0105	COIL:MOLDED CHOKE 8.20 UH 10%	28480	9140-0105	1	
9140-0129	COIL:FXD RF 220 UH	28480	9140-0129	2	
9140-0148	COIL:FXD RF 3.41 UH	28480	9140-0148	2	
9140-0149	COIL:FXD RF 1.86 UH	28480	9140-0149	1	
9140-0150	COIL:FXD RF 2.75 UH	28480	9140-0150	1	
9140-0151	COIL:FXD RF 2.07 UH	28480	9140-0151	1	
9140-0152	COIL:FXD RF 41.06 UH	28480	9140-0152	2	
9140-0153	COIL:FXD RF 36.8 UH	28480	9140-0153	2	
9140-0154	COIL:FXD RF 53.8 UH	28480	9140-0154	3	
9140-0155	COIL:FXD RF 28 UH	28480	9140-0155	1	
9140-0156	COIL:FXD RF 72.3 UH	28480	9140-0156	1	
00310-200	LAMPHOLDER:INDICATOR 3 SOCKET	28480	00310-200	1	
00310-602	Main Gear Assy	28480	00310-602	1	
310A-19A	SWITCH ASSY:INPUT ATTENUATOR	28480	310A-19A	1	
310A-19B	SWITCH ASSY:I.F. ATTENUATOR	28480	310A-19B	1	

See list of abbreviations in introduction to this section

Table 6-2. Replaceable Parts (Cont'd)

hp Stock No.	Description #	Mfr.	Mfr. Part No.	TQ	RS
310A-19C	Switch Assy:R. F. Attenuator	28480	310A-19C	1	
310A-19D	SWITCH ASSY: Bandwidth	28480	310A-19D	1	
310A-19E	SWITCH ASSY: Mode	28480	310A-19E	1	
00310-00204	Panel: Front	28480	00310-00204	1	
310A-2B	PANEL: Rear half recess	28480	310A-2B	1	
310A-2C	PANEL:REAR HALF unrecessed	28480	310A-2C	1	
00310-00202	Front panel (Option 01)	28480	00310-00202	1	
310A-2E	PANEL:REAR HALF recess	28480	310A-2E	1	
310A-60A	INDUCTOR:175 MH	28480	310A-60A	1	
310A-60C	COIL:ZERO SET	28480	310A-60C	1	
310A-65B	ASSY:1ST MIXER PAIR	28480	310A-65B	1	
310A-65C	ASSY:2ND MIXER PAIR	28480	310A-65C	2	
310A-65D	ASSY:ACTIVE LOW PASS FILTER	28480	310A-65D	1	
310A-65E	ASSY:3MC LOW PASS FILTER	28480	310A-65E	1	
310A-65F	ASSY:3MC OSCILLATOR	28480	310A-65F	1	
310A-65G	ASSY:INPUT AMP AND CALIB	28480	310A-65G	1	
310A-65H	ASSY:LOCAL OSC AND INPUT MIXER	28480	310A-65H	1	
310A-65J	ASSY:METER AMPLIFIER	28480	310A-65J	1	
310A-65K	ASSY:OUTPUT AMPLIFIER	28480	310A-65K	1	
310A-65L	ASSY:AFC #1	28480	310A-65L	1	
310A-65M	ASSY:AFC #2	28480	310A-65M	1	
310A-65N	ASSY:BFO	28480	310A-65N	1	
310A-65P	ASSY:LOCAL OSCILLATOR	28480	310A-65P	1	
310A-65R	ASSY:INPUT ATTENUATOR BOARD	28480	310A-65R	1	
310A-65S	ASSY:1.5MC LOW PASS FILTER	28480	310A-65S	2	
310A-65T	ASSY:INPUT AMP CAL	28480	310A-65T	1	
310A-65U	ASSY:POWER SUPPLY	28480	310A-65U	1	
310A-7C	CAPACITOR:VAR AIR 90-300 PF	28480	310A-7C	1	
00310-48801	WASHER: OUTPUT CONNECTOR	28480	00310-48801		
310A-88A	WASHER:OUTPUT CONNECTOR	28480	310A-88A	1	
310A-9A	TRANSFORMER ASSY	28480	310A-9A	1	
310A-9B	TRANSFORMER ASSY	28480	310A-9B	2	
310A-9C	TRANSFORMER	28480	310A-9C	1	
310A-9D	TRANSFORMER ASSY	28480	310A-9D	1	
310A-9E	TRANSFORMER ASSY	28480	310A-9E	1	
310A-9F	TRANSFORMER ASSY	28480	310A-9F	1	
310A-9G	TRANSFORMER ASSY	28480	310A-9F	1	
310A-9H	TRANSFORMER ASSY	28480	310A-9H	1	
310A-9J	TRANSFORMER ASSY	28480	310A-9J	1	
310A-9K	TRANSFORMER	28480	310A-9K	1	
310A-9L	TRANSFORMER	28480	310A-9L	1	
310A-9M	TRANSFORMER	28480	310A-9M	1	
310A-9N	TRANSFORMER ASSY	28480	310A-9N	1	
310A-9P	TRANSFORMER ASSY	28480	310A-9P	1	
310A-9R	TRANSFORMER ASSY	28480	310A-9R	1	
310A-99A	WINDOW:RANGE	28480	310A-99A	1	

See list of abbreviations in introduction to this section

CODE LIST OF MANUFACTURERS

The following code numbers are from the Federal Supply Code for Manufacturers Cataloging Handbooks H4-1 (Name to Code) and H4-2 (Code to Name) and their latest supplements. The date of revision and the date of the supplements used appear at the bottom of each page. Alphabetical codes have been arbitrarily assigned to suppliers not appearing in the H4 Handbooks.

Code No.	Manufacturer	Address
00000	U.S.A Common	Any supplier of U.S.
00136	McCoy Electronics	Mount Holly Springs, Pa.
00213	Sage Electronics Corp.	Rochester, N.Y.
00287	Cemco, Inc.	Danielson, Conn.
00334	Humidial	Colton, Calif.
00348	Mictron, Co., Inc.	Valley Stream, N.Y.
00373	Garlock Inc.	Cherry Hill, N.J.
00656	Aerovox Corp.	New Bedford, Mass.
00779	Amp. Inc.	Harrisburg, Pa.
00781	Aircraft Radio Corp.	Boonton, N.J.
00809	Croven, Ltd.	Whitby, Ontario, Canada
00815	Northern Engineering Laboratories, Inc.	Burlington, Wis.
00853	Sangamo Electric Co., Pickens Div.	Pickens, S.C.
00866	Goe Engineering Co.	City of Industry, Cal.
00891	Carl E. Holmes Corp.	Los Angeles, Cal.
00929	Microlab Inc.	Livingston, N.J.
01002	General Electric Co., Capacitor Dept.	Hudson Falls, N.Y.
01009	Alden Products Co.	Brockton, Mass.
01121	Allen Bradley Co.	Milwaukee, Wis.
01255	Litton Industries, Inc.	Beverly Hills, Cal.
01281	TRW Semiconductors, Inc.	Lawndale, Cal.
01295	Texas Instruments, Inc., Transistor Products Div.	Dallas, Texas
01349	The Alliance Mfg. Co	Alliance, Ohio
01538	Small Parts Inc.	Los Angeles, Cal.
01589	Pacific Relays, Inc.	Van Nuys, Cal.
01670	Gudebrod Bros. Silk Co.	New York, N.Y.
01930	Amerock Corp.	Rockford, Ill.
01960	Pulse Engineering Co	Santa Clara, Cal.
02114	Ferroxcube Corp. of America	Saugerties, N.Y.
02116	Wheelock Signals, Inc.	Long Branch, N.J.
02286	Cole Rubber and Plastics Inc	Sunnyvale, Cal.
02660	Amphenol-Borg Electronics Corp.	Broadview, Ill.
02735	Radio Corp. of America, Semiconductor and Materials Division	Somerville, N.J.
02771	Vocaline Co. of America, Inc.	Old Saybrook, Conn.
02777	Hopkins Engineering Co.	San Fernando, Cal.
02875	Hudson Tool & Die	Newark, N.J.
03296	Nylon Molding Corp.	Springfield, N.J.
03508	G.E. Semiconductor Prod. Dept.	Syracuse, N.Y.
03705	Apex Machine & Tool Co.	Dayton, Ohio
03797	Eldema Corp.	Compton, Calif.
03818	Parker Seal Co.	Los Angeles, Cal.
03877	Transitron Electric Corp.	Wakefield, Mass.
03888	Pyrofilm Resistor Co., Inc.	Cedar Knolls, N.J.
03954	Singer Co., Diehl Div., Finderne Plant	Sumerville, N.J.
04009	Arrow, Hart and Hegeman Elect. Co.	Hartford, Conn.
04013	Taruus Corp.	Lambertville, N.J.
04062	Arco Electronic Inc.	Great Neck, N.Y.
04217	Essex Wire	Los Angeles, Cal.
04222	Hi-Q Division of Aerovox	Myrtle Beach, S.C.
04354	Precision Paper Tube Co.	Wheeling, Ill.
04404	Palo Alto Division of Hewlett-Packard Co.	Palo Alto, Cal.
04651	Sylvania Electric Products, Microwave Device Div.	Mountain View, Cal.
04673	Dakota Engr. Inc.	Culver City, Cal.
04713	Motorola Inc. Semiconductor Prod. Div.	Phoenix, Arizona
04732	Filtron Co., Inc. Western Div.	Culver City, Cal.
04773	Automatic Electric Co.	Northlake, Ill.
04796	Sequoia Wire Co.	Redwood City, Cal.
04811	Precision Coil Spring Co.	El Monte, Cal.
04870	P.M. Motor Company	Westchester, Ill.
04919	Component Mfg. Service Co.	W. Bridgewater, Mass.
05006	Twentieth Century Plastics, Inc.	Los Angeles, Cal.
05277	Westinghouse Electric Corp. Semiconductor Dept.	Youngwood, Pa.
05347	Ultronix, Inc.	San Mateo, Cal.
05397	Union Carbine Corp., Elect. Div.	New York, N.Y.
05574	Viking Ind. Inc.	Canoga Park, Cal.
05593	Icore Electro-Plastics Inc.	Sunnyvale, Cal.
05616	Cosmo Plastic (c/o Electrical Spec. Co.)	Cleveland, Ohio
05624	Barber Colman Co.	Rockford, Ill.
05728	Tiffen Optical Co.	Roslyn Heights, Long Island, N.Y.
05729	Metro-Tel Corp.	Westbury, N.Y.
05783	Stewart Engineering Co.	Santa Cruz, Cal.
05820	Wakefield Engineering Inc.	Wakefield, Mass.
06004	Bassick Co., Div. of Stewart Warner Corp.	Bridgeport, Conn.
06090	Raychem Corp.	Redwood City, Cal.
06175	Bausch and Lomb Optical Co.	Rochester, N.Y.
06402	E.T.A. Products Co. of America	Chicago, Ill.
06540	Amatom Electronic Hardware Co., Inc.	New Rochelle, N.Y.
06555	Beede Electrical Instrument Co., Inc.	Penacook, N.H.
06666	General Devices Co., Inc.	Indianapolis, Ind.
06751	Components Inc., Ariz. Div.	Phoenix, Arizona
06812	Torrington Mfg. Co., West Div.	Van Nuys, Cal.
06980	Varian Assoc. Etmac Div.	San Carlos, Cal.
07088	Kelvin Electric Co.	Van Nuys, Cal.
07126	Digitran Co.	Pasadena, Cal.
07137	Transistor Electronics Corp.	Minneapolis, Minn.
07138	Westinghouse Electric Corp., Electronic Tube Div.	Elmira, N.Y.
07149	Filmohm Corp.	New York, N.Y.
07233	Cinch-Graphik Co.	City of Industry, Cal.
07256	Silicon Transistor Corp.	Carle Place, N.Y.
07261	Avnet Corp.	Culver City, Cal.
07263	Fairchild Camera & Inst. Corp., Semiconductor Div.	Mountain View, Cal.
07322	Minnesota Rubber Co.	Minneapolis, Minn.
07387	Birtcher Corp, The	Monterey Park, Cal.
07397	Sylvania Elect. Prod. Inc., Mt. View Operations	Mountain View, Cal.
07700	Technical Wire Products Inc.	Cranford, N.J.
07829	Bodine Elect. Co.	Chicago, Ill.
07910	Continental Device Corp.	Hawthorne, Cal.
07933	Raytheon Mfg. Co., Semiconductor Div.	Mountain View, Cal.
07980	Hewlett-Packard Co., New Jersey Division	Rockaway, N.J.
08145	U.S. Engineering Co.	Los Angeles, Cal.
08289	Blinn, Delbert Co.	Pomona, Cal.
08358	Burgess Battery Co.	Niagara Falls, Ontario, Canada
08524	Deutsch Fastener Corp.	Los Angeles, Cal.
08664	Bristol Co., The	Waterbury, Conn.
08717	Sloan Company	Sun Valley, Cal.
08718	ITT Cannon Electric Inc., Phoenix Div.	Phoenix, Arizona
08727	National Radio Lab. Inc.	Paramus, N.J.
08792	CBS Electronics Semiconductor Operations, Div. of CBS Inc	Lowell, Mass.
08806	General Electric Co., Miniature Lamp Dept.	Cleveland, Ohio
08984	Mel-Rain	Indianapolis, Ind.
09026	Babcock Relays Div.	Costa Mesa, Cal.
09097	Electronic Enclosures Inc.	Los Angeles, Calif.
09134	Texas Capacitor Co.	Houston, Texas
09145	Tech. Ind. Inc. Atohm Elect.	Burbank, Cal.
09250	Electro Assemblies, Inc.	Chicago, Ill.
09353	C & K Components Inc.	Newton, Mass.
09569	Mallory Battery Co. of Canada, Ltd.	Toronto, Ontario, Canada
09795	Pennsylvania Florocarbon	Clifton Heights, Penn.
09922	Burndy Corp	Norwalk, Conn.
10214	General Transistor Western Corp.	Los Angeles, Cal.
10411	Ti-Tal, Inc.	Berkeley, Cal.
10646	Carborundum Co.	Niagara Falls, N.Y.
11236	CTS of Berne, Inc.	Berne, Ind.
11237	Chicago Telephone of California, Inc.	So. Pasadena, Cal.
11242	Bay State Electronics Corp.	Waltham, Mass.
11312	Teledyne Inc., Microwave Div.	Palo Alto, Cal.
11314	National Seal	Downey, Cal.
11453	Precision Connector Corp.	Jamaica, N.Y.
11534	Duncan Electronics Inc.	Costa Mesa, Cal.
11711	General Instrument Corp., Semiconductor Division Products Group	Newark, N.J.
11717	Imperial Electronic, Inc.	Buena Park, Cal.
11870	Melabs, Inc.	Palo Alto, Cal.
12136	Philadelphia Handle Co.	Camden, N.J.
12361	Grove Mfg. Co., Inc.	Shady Grove, Pa.
12574	Gulton Ind. Inc., Data System Div.	Albuquerque, N.M.
12697	Clarostat Mfg. Co.	Dover, N.H.
12728	Elmar Filter Corp	W. Haven, Conn.
12859	Nippon Electric Co., Ltd.	Tokyo, Japan
12881	Metex Electronics Corp.	Clark, N.J.
12930	Delta Semiconductor Inc.	Newport Beach, Cal.
12954	Dickson Electronics Corp.	Scottsdale, Arizona
13019	Airco Supply Co., Inc.	Witchita, Kansas
13061	Wilco Products	Detroit, Mich.
13103	Thermolloy	Dallas, Texas
13327	Solitron Devices Inc.	Tappan, N.Y.
13396	Telefunken (GmbH)	Hanover, Germany
13835	Midland-Wright Div. of Pacific Industries, Inc.	Kansas City, Kansas
14099	Sem-Tech	Newbury Park, Cal.
14193	Calif. Resistor Corp	Santa Monica, Cal.
14298	American Components, Inc.	Conshohocken, Pa.
14433	ITT Semiconductor, a Div. of Int. Telephone and Telegraph Corporation	West Palm Beach, Fla.
14493	Hewlett-Packard Company	Loveland, Colo.
14655	Cornell Dublier Electric Corp	Newark, N.J.
14674	Corning Glass Works	Corning, N.Y.
14752	Electro Cube Inc.	San Gabriel, Cal.
14960	Williams Mfg. Co.	San Jose, Cal.
15106	The Sphere Co., Inc.	Little Falls, N.J.
15203	Webster Electronics Co.	New York, N.Y.
15287	Scionics Corp.	Northridge, Cal.
15291	Adjustable Bushing Co.	N. Hollywood, Cal.
15558	Micron Electronics	Garden City, Long Island, N.Y.
15566	Amprobe Inst. Corp.	Lynbrook, N.Y.
15631	Cabletronics	Costa Mesa, Cal.
15772	Twentieth Century Coil Spring Co.	Santa Clara, Cal.
15801	Fenwal Elect. Inc.	Framingham, Mass.
15818	Amelco Inc.	Mountain View, Cal.
16037	Spruce Pine Mica Co.	Spruce Pine, N.C.
16179	Omni-Spectra Inc.	Detroit, Ill.
16352	Computer Diode Corp.	Lodi, N.J.
16554	Electroid Co.	Union, N.J.
16585	Boots Aircraft Nut Corp.	Pasadena, Cal.
16688	Ideal Prec. Meter Co., Inc., De Jur Meter Div.	Brooklyn, N.Y.
16758	Delco Radio Div. of G.M. Corp.	Kokomo, Ind.
17109	Thermonetics Inc.	Canoga Park, Cal.
17474	Tranex Company	Mountain View, Cal.
17675	Hamlin Metal Products Corp.	Akron, Ohio
17745	Angstrohm Prec. Inc.	No. Hollywood, Cal.
17856	Siliconix Inc.	Sunnyvale, Cal.
17870	McGraw-Edison Co.	Manchester, N.H.
18042	Power Design Pacific Inc.	Palo Alto, Cal.
18083	Clevite Corp. Semiconductor Div.	Palo Alto, Cal.
18324	Signetics Corp.	Sunnyvale, Cal.
18476	Ty-Car Mfg. Co., Inc.	Holliston, Mass.
18486	TRW Elect. Comp. Div.	Des Plaines, Ill.
18565	Chomerics	Plainville, Mass.
18583	Curtis Instrument, Inc.	Mt. Kisco, N.Y.
18612	Vishay Instruments Inc.	Malvern, Pa.
18873	E.I. DuPont and Co., Inc.	Wilmington, Del.
18911	Durant Mfg. Co.	Milwaukee, Wis.
19315	The Bendix Corp., Navigation & Control Div.	Teterboro, N.J.
19500	Thomas A. Edison Industries, Div. of McGraw-Edison	West Orange, N.J.
19589	Concoa	Baldwin Park, Cal.

CODE LIST OF MANUFACTURERS (Continued)

Code No.	Manufacturer	Address
19644	LRC Electronics	Horseheads, N.Y.
19701	Electra Mfg. Co.	Independence, Kansas
20183	General Atronics Corp.	Philadelphia, Pa.
21226	Executone, Inc.	Long Island City, N.Y.
21355	Fafnir Bearing Co., The	New Britian, Conn.
21520	Fansteel Metallurgical Corp.	N. Chicago, Ill.
23020	General Reed Co.	Metuchen, N.J.
23042	Texscan Corp.	Indianapolis, Ind.
23783	British Radio Electronics Ltd.	Washington, D.C.
24455	G.E. Lamp Division, Nela Park, Cleveland, Ohio	
24655	General Radio Co.	West Concord, Mass.
24681	Memcor Inc., Comp. Div.	Huntington, Ind.
26365	Gries Reproducer Corp.	New Rochelle, N.Y.
26462	Grobert File Co. of America, Inc.	Carlstadt, N.J.
26851	Compac/Hollister Co.	Hollister, Cal.
26992	Hamilton Watch Co.	Lancaster, Pa.
28480	Hewlett-Packard Co.	Palo Alto, Cal.
28520	Heyman Mfg. Co.	Kenilworth, N.J.
30817	Instrument Specialties Co., Inc.	Little Falls, N.J.
33173	G.E. Receiving Tube Dept.	Owensboro, Ky.
35434	Lectrohm Inc.	Chicago, Ill.
36196	Stanwyck Coil Products, Ltd.	Hawkesbury, Ontario, Canada
36287	Cunningham, W.H. & Hill, Ltd.	Toronto, Ontario, Canada
37942	P.R. Mallory & Co., Inc.	Indianapolis, Ind.
39543	Mechanical Industries Prod. Co.	Akron, Ohio
40920	Miniature Precision Bearings, Inc.	Keene, N.H.
40931	Honeywell Inc.	Minneapolis, Minn.
42190	Muter Co.	Chicago, Ill.
43990	C.A. Norgren Co.	Englewood, Colo.
44655	Ohmite Mfg. Co.	Skokie, Ill.
46384	Penn Eng. & Mfg. Corp.	Doylestown, Pa.
47904	Polaroid Corp.	Cambridge, Mass.
48620	Precision Thermometer & Inst. Co.	Southampton, Pa.
49956	Microwave & Power Tube Div.	Waltham, Mass.
52090	Rowan Controller Co.	Westminster, Md.
52983	HP Co., Med. Elec. Div.	Waltham, Mass.
54294	Shallcross Mfg. Co.	Selma, N.C.
55026	Simpson Electric Co.	Chicago, Ill.
55933	Sonotone Corp.	Elmsford, N.Y.
55938	Raytheon Co. Commercial Apparatus & System Div.	So. Norwalk, Conn.
56137	Spaulding Fibre Co., Inc.	Tonawanda, N.Y.
56289	Sprague Electric Co.	North Adams, Mass.
58474	Superior Elect. Co.	Bristol, Conn.
59446	Telex Corp.	Tulsa, Okla.
59730	Thomas & Betts Co.	Elizabeth, N.J.
60741	Triplett Electrical Inst. Co.	Bluffton, Ohio
61775	Union Switch and Signal Div. of Westinghouse Air Brake Co.	Pittsburgh, Pa.
62119	Universal Electric Co.	Owosso, Mich.
63743	Ward-Leonard Electric Co.	Mt. Vernon, N.Y.
64959	Western Electric Co., Inc.	New York, N.Y.
65092	Weston Inst. Inc. Weston-Newark	Newark, N.J.
66295	Wittek Mfg. Co.	Chicago, Ill.
66346	Minnesota Mining & Mfg. Co. Revere Mincom Div.	St. Paul, Minn.
70276	Allen Mfg. Co.	Hartford, Conn.
70309	Allied Control	New York, N.Y.
70318	Allmetal Screw Product Co., Inc.	Garden City, N.Y.
70417	Amplex, Div. of Chrysler Corp.	Detroit, Mich.
70485	Atlantic India Rubber Works, Inc.	Chicago, Ill.
70563	Amperite Co., Inc.	Union City, N.J.
70674	ADC Products Inc.	Minneapolis, Minn.
70903	Belden Mfg. Co.	Chicago, Ill.
70998	Bird Electric Corp.	Cleveland, Ohio
71002	Birnbach Radio Co.	New York, N.Y.
71034	Bliley Electric Co., Inc.	Erie, Pa.
71041	Boston Gear Works Div. of Murray Co. of Texas	Quincey, Mass.
71218	Bud Radio, Inc.	Willoughby, Ohio
71279	Cambridge Thermionics Corp.	Cambridge, Mass.
71286	Camloc Fastener Corp.	Paramus, N.J.
71313	Cardwell Condenser Corp.	Lindenhurst, L.I., N.Y.
71400	Bussmann Mfg. Div. of McGraw-Edison Co.	St. Louis, Mo.
71436	Chicago Condenser Corp.	Chicago, Ill.
71447	Calif. Spring Co., Inc.	Pico-Rivera, Cal.
71450	CTS Corp.	Elkhart, Ind.
71468	ITT Cannon Electric Inc.	Los Angeles, Cal.
71471	Cinema, Div. Aerovox Corp.	Burbank, Cal.
71482	C.P. Clare & Co.	Chicago, Ill.
71590	Centralab Div. of Globe Union Inc.	Milwaukee, Wis.
71616	Commercial Plastics Co.	Chicago, Ill.
71700	Cornish Wire Co., The	New York, N.Y.
71707	Coto Coil Co., Inc.	Providence, R.I.
71744	Chicago Miniature Lamp Works	Chicago, Ill.
71785	Cinch Mfg. Co., Howard B. Jones Div.	Chicago, Ill.
71984	Dow Corning Corp.	Midland, Mich.
72136	Electro Motive Mfg. Co., Inc.	Willimantic, Conn.
72619	Dialight Corp.	Brooklyn, N.Y.
72656	Indiana General Corp., Electronics Div.	Keasby, N.J.
72699	General Instrument Corp., Cap Division	Newark, N.J.
72765	Drake Mfg. Co.	Harwood Heights, Ill.
72825	Hugh H. Eby Inc.	Philadelphia, Pa.
72928	Gudeman Co.	Chicago, Ill.
72962	Elastic Stop Nut Corp.	Union, N.J.
72964	Robert M. Hadley Co.	Los Angeles, Cal.
72982	Erie Technological Products, Inc.	Erie, Pa.
73061	Hansen Mfg. Co., Inc.	Princeton, Ind.
73076	H.M. Harper Co.	Chicago, Ill.
73138	Helipot Div. of Beckman Inst., Inc.	Fullerton, Cal.
73293	Hughes Products Division of Hughes Aircraft Co.	Newport Beach, Cal.
73445	Amperex Elect. Co.	Hicksville, L.I., N.Y.
73506	Bradley Semiconductor Corp.	New Haven, Conn.
73559	Carling Electric, Inc.	Hartford, Conn.
73586	Circle F Mfg. Co.	Trenton, N.J.
73682	George K. Garrett Co., Div. MSL Industries, Inc.	Philadelphia, Pa.
73734	Federal Screw Products, Inc.	Chicago, Ill.
73743	Fischer Special Mfg. Co.	Cincinnati, Ohio
73793	General Industries Co., The	Elyria, Ohio
73846	Goshen Stamping & Tool Co.	Goshen, Ind.
73899	JFD Electronics Corp.	Brooklyn, N.Y.
73905	Jennings Radio Mfg. Corp.	San Jose, Cal.
73957	Groove-Pin Corp.	Ridgefield, N.J.
74276	Signalite Inc.	Neptune, N.J.
74455	J.H. Winns, and Sons	Winchester, Mass.
74861	Industrial Condenser Corp.	Chicago, Ill.
74868	R.F. Products Division of Amphenol-Borg Electronic Corp.	Danbury, Conn.
74970	E.F. Johnson Co.	Waseca, Minn.
75042	International Resistance Co.	Philadelphia, Pa.
75263	Keystone Carbon Co., Inc.	St. Marys, Pa.
75378	CTS Knights, Inc.	Sandwich, Ill.
75382	Kulka Electric Corp.	Mt. Vernon, N.Y.
75818	Lenz Electric Mfg. Co.	Chicago, Ill.
75915	Littlefuse, Inc.	Des Plaines, Ill.
76005	Lord Mfg. Co.	Erie, Pa.
76210	C.W. Marwedel	San Francisco, Cal.
76433	General Instrument Corp., Micamold Division	Newark, N.J.
76487	James Millen Mfg. Co., Inc.	Malden, Mass.
76493	J.W. Miller Co.	Los Angeles, Cal.
76530	Cinch-Monadnock, Div. of United Carr Fastener Corp.	San Leandro, Cal.
76545	Mueller Electric Co.	Cleveland, Ohio
76703	National Union	Newark, N.J.
76854	Oak Manufacturing Co.	Crystal Lake, Ill.
77068	The Bendix Corp., Electrodynamics Div.	N. Hollywood, Cal.
77075	Pacific Metals Co.	San Francisco, Cal.
77221	Phaostran Instrument and Electronic Co.	So. Pasadena, Cal.
77252	Philadelphia Steel and Wire Corp.	Philadelphia, Pa.
77342	American Machine & Foundry Co. Potter & Brumfield Div.	Princeton, Ind.
77630	TRW Electronic Components Div.	Camden, N.J.
77638	General Instrument Corp., Rectifier Division	Brooklyn, N.Y.
77764	Resistance Products Co.	Harrisburg, Pa.
77969	Rubbercraft Corp. of Calif.	Torrance, Cal.
78189	Shakeproof Division of Illinois Tool Works	Elgin, Ill.
78277	Sigma	So. Braintree, Mass.
78283	Signal Indicator Corp.	New York, N.Y.
78290	Struthers-Dunn Inc.	Pitman, N.J.
78452	Thompson-Bremer & Co.	Chicago, Ill.
78471	Tilley Mfg. Co.	San Francisco, Cal.
78488	Stackpole Carbon Co.	St. Marys, Pa.
78493	Standard Thomson Corp.	Waltham, Mass.
78553	Tinnerman Products, Inc.	Cleveland, Ohio
78790	Transformer Engineers	San Gabriel, Cal.
78947	Ucinite Co.	Newtonville, Mass.
79136	Waldes Kohinoor Inc.	Long Island City, N.Y.
79142	Veeder Root, Inc.	Hartford, Conn.
79251	Wenco Mfg. Co.	Chicago, Ill.
79727	Continental-Wirt Electronics Corp.	Philadelphia, Pa.
79963	Zierick Mfg. Corp.	New Rochelle, N.Y.
80031	Mepco Division of Sessions Clock Co.	Morristown, N.J.
80033	Prestole Corp.	Toledo, Ohio
80120	Schnitzer Alloy Products Co.	Elizabeth, N.J.
80131	Electronic Industries Association. Standard tube or semi-conductor device, any manufacturer.	
80207	Unimax Switch, Div. Maxon Electronics Corp.	Wallingford, Conn.
80223	United Transformer Corp.	New York, N.Y.
80248	Oxford Electric Corp.	Chicago, Ill.
80294	Bourns Inc.	Riverside, Cal.
80411	Arco Div. of Robertshaw Controls Co.	Columbus, Ohio
80486	All Star Products Inc.	Defiance, Ohio
80509	Avery Label Co.	Monrovia, Cal.
80583	Hammarlund Co., Inc.	Mars Hill, N.C.
80640	Stevens, Arnold, Co., Inc.	Boston, Mass.
80813	Dimco Gray Co.	Dayton, Ohio
81030	International Inst. Inc.	Orange, Conn.
81073	Grayhill Co.	LaGrange, Ill.
81095	Triad Transformer Corp.	Venice, Cal.
81312	Winchester Elec. Div. Litton Ind., Inc.	Oakville, Conn.
81349	Military Specification	
81483	International Rectifier Corp.	El Segundo, Cal.
81541	Airpax Electronics, Inc.	Cambridge, Maryland
81860	Barry Controls, Div. Barry Wright Corp.	Watertown, Mass.
82042	Carter Precision Electric Co.	Skokie, Ill.
82047	Sperti Faraday Inc., Copper Hewitt Electric Div.	Hoboken, N.J.
82116	Electric Regulator Corp.	Norwalk, Conn.
82142	Jeffers Electronics Division of Speer Carbon Co.	Du Bois, Pa.
82170	Fairchild Camera & Inst. Corp., Space & Defense Systems Div.	Paramus, N.J.
82209	Magurie Industries, Inc.	Greenwich, Conn.
82219	Sylvania Electric Prod., Inc. Electronic Tube Division	Emporium, Pa.
82376	Astron Corp.	East Newark, Harrison, N.J.
82389	Switchcraft, Inc.	Chicago, Ill.
82647	Metals & Controls Inc., Spencer Products	Attleboro, Mass.
82768	Phillips-Advance Control Co.	Joliet, Ill.
82866	Research Products Corp.	Madison, Wis.
82877	Rolton Mfg. Co., Inc.	Woodstock, N.Y.
82893	Vector Electronic Co.	Glendale, Cal.
83058	Carr Fastener Co.	Cambridge, Mass.
83086	New Hampshire Ball Bearing, Inc.	Peterborough, N.H.
83125	General Instrument Corp., Capacitor Div.	Darlington, S.C.
83148	ITT Wire and Cable Div.	Los Angeles, Cal.
83186	Victory Eng. Corp.	Springfield, N.J.
83298	Bendix Corp., Red Bank Div.	Red Bank, N.J.
83315	Hubbell Corp.	Mundelein, Ill.
83324	Rosan Inc.	Newport Beach, Cal.
83330	Smith, Herman H., Inc.	Brooklyn, N.Y.
83332	Tech Labs	Palisades Park, N.J.
83385	Central Screw Co.	Chicago, Ill.
83501	Gavitt Wire and Cable Co., Div. of Amerace Corp.	Brookfield, Mass.
83594	Burroughs Corp., Electronic Tube Div.	Plainfield, N.J.
83740	Union Carbide Corp., Consumer Prod. Div.	New York, N.Y.
83777	Model Eng. and Mfg., Inc.	Huntington, Ind.
83821	Loyd Scruggs Co.	Festus, Mo.
83942	Aeronautical Inst. & Radio Co.	Lodi, N.J.
84171	Arco Electronics Inc.	Great Neck, N.Y.
84396	A.J. Glesener Co., Inc.	San Francisco, Cal.
84411	TRW Capacitor Div.	Ogallala, Neb.

CODE LIST OF MANUFACTURERS (Continued)

Code No.	Manufacturer	Address
94870	Sarkes Tarzian, Inc.	Bloomington, Ind.
85454	Boonton Molding Company	Boonton, N.J.
85471	A.B. Boyd Co.	San Francisco, Cal.
85474	R.M. Bracamonte & Co.	San Francisco, Cal.
85660	Koiled Kords, Inc.	Hamden, Conn.
85911	Seamless Rubber Co.	Chicago, Ill.
86174	Fafnir Bearing Co.	Los Angeles, Calif.
86197	Clifton Precision Products Co., Inc.	Clifton Heights, Pa.
86579	Precision Rubber Products Corp.	Dayton, Ohio
86684	Radio Corp. of America, Electronic Comp. & Devices Division	Harrison, N.J.
86928	Seastrom Mfg. Co.	Glendale, Cal.
87034	Marco Industries	Anaheim, Cal.
87216	Philco Corporation (Lansdale Division)	Lansdale, Pa.
87473	Western Fibrous Glass Products Co.	San Francisco, Cal.
87664	Van Waters & Rogers Inc.	San Francisco, Cal.
87930	Tower Mfg. Corp.	Providence, R.I.
88140	Cutler-Hammer, Inc.	Lincoln, Ill.
88220	Gould-National Batteries, Inc.	St. Paul, Minn.
88698	General Mills, Inc.	Buffalo, N.Y.
89231	Graybar Electric Co.	Oakland, Cal.
89473	G.E. Distributing Corp.	Schenectady, N.Y.
89479	Security Co.	Detroit, Mich.
89665	United Transformer Co.	Chicago, Ill.
90030	United Shoe Machinery Corp.	Beverly, Mass.
90179	U.S. Rubber Co., Consumer Ind. & Plastics Prod. Div.	Passaic, N.J.
90365	Belleville Speciality Tool Mfg., Inc.	Belleville, Ill.
90763	United Carr Fastener Corp.	Chicago, Ill.
90970	Bearing Engineering Co.	San Francisco, Cal.
91146	ITT Cannon Elect. Inc., Salem Div.	Salem, Mass.
91260	Connor Spring Mfg. Co.	San Francisco, Cal.
91345	Miller Dial & Nameplate Co.	El Monte, Cal.
91418	Radio Materials Co.	Chicago, Ill.
91506	Augat Inc.	Attleboro, Mass.
91637	Dale Electronics, Inc.	Columbus, Nebr.
91662	Elco Corp.	Willow Grove, Pa.
91673	Epiphone Inc.	New York, N.Y.
91737	Gremar Mfg. Co., Inc.	Wakefield, Mass.
91827	K F Development Co.	Redwood City, Cal.
91886	Malco Mfg., Inc.	Chicago, Ill.
91929	Honeywell Inc., Micro Switch Division	Freeport, Ill.
91961	Nahm-Bros. Spring Co.	Oakland, Cal.
92180	Tru-Connector Corp.	Peabody, Mass.
92367	Elgeet Optical Co., Inc.	Rochester, N.Y.
92607	Tensolite Insulated Wire Co., Inc.	Tarrytown, N.Y.
92702	IMC Magnetics Corp.	Westbury, L.I., N.Y.
92966	Hudson Lamp Co.	Kearney, N.J.
93332	Sylvania Electric Prod. Inc., Semiconductor Div.	Woburn, Mass.
93369	Robbins & Myers Inc.	Pallisades Park, N.J.
93410	Stemco Controls, Div. of Essex Wire Corp.	Mansfield, Ohio
93632	Waters Mfg. Co.	Culver City, Cal.
93929	G.V. Controls	Livingston, N.J.
94137	General Cable Corp.	Bayonne, N.J.
94144	Raytheon Co., Comp. Div., Ind. Comp. Operations	Quincy, Mass.
94148	Scientific Electronics Products, Inc.	Loveland, Colo.
94154	Wagner Elect. Corp., Tung-Sol Div.	Newark, N.J.
94197	Curtiss-Wright Corp., Electronics Div.	East Patterson, N.J.
94222	South Chester Corp.	Chester, Pa.
94330	Wire Cloth Products, Inc.	Bellwood, Ill.
94375	Automatic Metal Products Co.	Brooklyn, N.Y.
94682	Worcester Pressed Aluminum Corp.	Worcester, Mass.
94696	Magnecraft Electric Co.	Chicago, Ill.
95023	George A. Philbrick Researchers, Inc.	Boston, Mass.
95146	Alco Elect. Mfg. Co.	Lawrence, Mass.
95236	Allies Products Corp.	Diania, Fla.
95238	Continental Connector Corp.	Woodside, N.Y.
95263	Leecraft Mfg. Co., Inc.	Long Island, N.Y.
95265	National Coil Co.	Sheridan, Wyo.
95275	Vitramon, Inc.	Bridgeport, Conn.
95348	Gordos Corp.	Bloomfield, N.J.
95354	Methode Mfg. Co.	Rolling Meadows, Ill.
95566	Arnold Engineering Co.	Marengo, Ill.
95712	Dage Electric Co., Inc.	Franklin, Ind.
95984	Siemon Mfg. Co.	Wayne, Ill.
95987	Weckesser Co.	Chicago, Ill.
96067	Microwave Assoc., West, Inc.	Sunnyvale, Cal.
96095	Hi-Q Div. of Aerovox Corp.	Olean, N.Y.
96256	Thordarson-Meissner Inc.	Mt. Carmel, Ill.
96296	Solar Mfg. Co.	Los Angeles, Cal.
96396	Microswitch, Div. of Minn.-Honeywell	Freeport, Ill.
96330	Carlton Screw Co.	Chicago, Ill.
96341	Microwave Associates, Inc.	Burlington, Mass.
96501	Excel Transformer Co.	Oakland, Cal.
96508	Xcelite, Inc.	Orchard Park, N.Y.
96733	San Fernando Elec. Mfg. Co.	San Fernando, Cal.
96881	Thomson Ind. Inc.	Long Island, N.Y.
97464	Industrial Retaining Ring Co.	Irvington, N.J.
97539	Automatic & Precision Mfg.	Englewood, N.J.
97979	Reon Resistor Corp.	Yonkers, N.Y.
97983	Litton System Inc., Adler-Westrex Commun. Div.	New Rochelle, N.Y.
98141	R-Tronics, Inc.	Jamaica, N.Y.
98159	Rubber Teck, Inc.	Gardena, Cal.
98220	Hewlett-Packard Co., Medical Elec. Div.	Pasadena, Cal.
98278	Microdot, Inc.	So. Pasadena, Cal.
98291	Sealectro Corp.	Mamaronech, N.Y.
98376	Zero Mfg. Co.	Burbank, Cal.
98410	Etc Inc.	Cleveland, Ohio
98731	General Mills Inc., Electronics Div.	Minneapolis, Minn.
98734	Paeco Division of Hewlett-Packard Co.	Palo Alto, Cal.
98821	North Hills Electronics, Inc.	Glen Cove, N.Y.
98978	International Electronic Research Corp.	Burbank, Cal.
99109	Columbia Technical Corp.	New York, N.Y.
99313	Varian Associates	Palo Alto, Cal.
99378	Atlee Corp.	Winchester, Mass.
99515	Marshall Ind., Capacitor Div.	Monrovia, Cal.
99707	Control Switch Division, Controls Co. of America	El Segundo, Cal.
99800	Delevan Electronics Corp.	East Aurora, N.Y.
99848	Wilco Corporation	Indianapolis, Ind.
99928	Branson Corp.	Whippany, N.J.
99934	Rembrandt, Inc.	Boston, Mass.
99942	Hoffman Electronics Corp., Semiconductor Division	El Monte, Cal.
99957	Technology-Instrument Corp. of California	Newbury Park, Cal.

The following HP Vendors have no number assigned in the latest supplement to the Federal Supply Code for Manufacturers Handbook.

0000F	Malco Tool and Die	Los Angeles, Calif.
0000Z	Willow Leather Products Corp.	Newark, N.J.
000AB	ETA	England
000BB	Precision Instrument Comp. Co.	Van Nuys, Cal.
000CS	Hewlett-Packard Co., Colorado Springs Div.	Colorado Springs, Colorado
000MM	Rubber Eng. & Development	Hayward, Cal.
000NN	A "N" D Mfg. Co.	San Jose, Cal.
000QQ	Cooltron	Oakland, Cal.
000WW	California Eastern Lab	Burlington, Cal.
000YY	S.K. Smith Co.	Los Angeles, Cal.

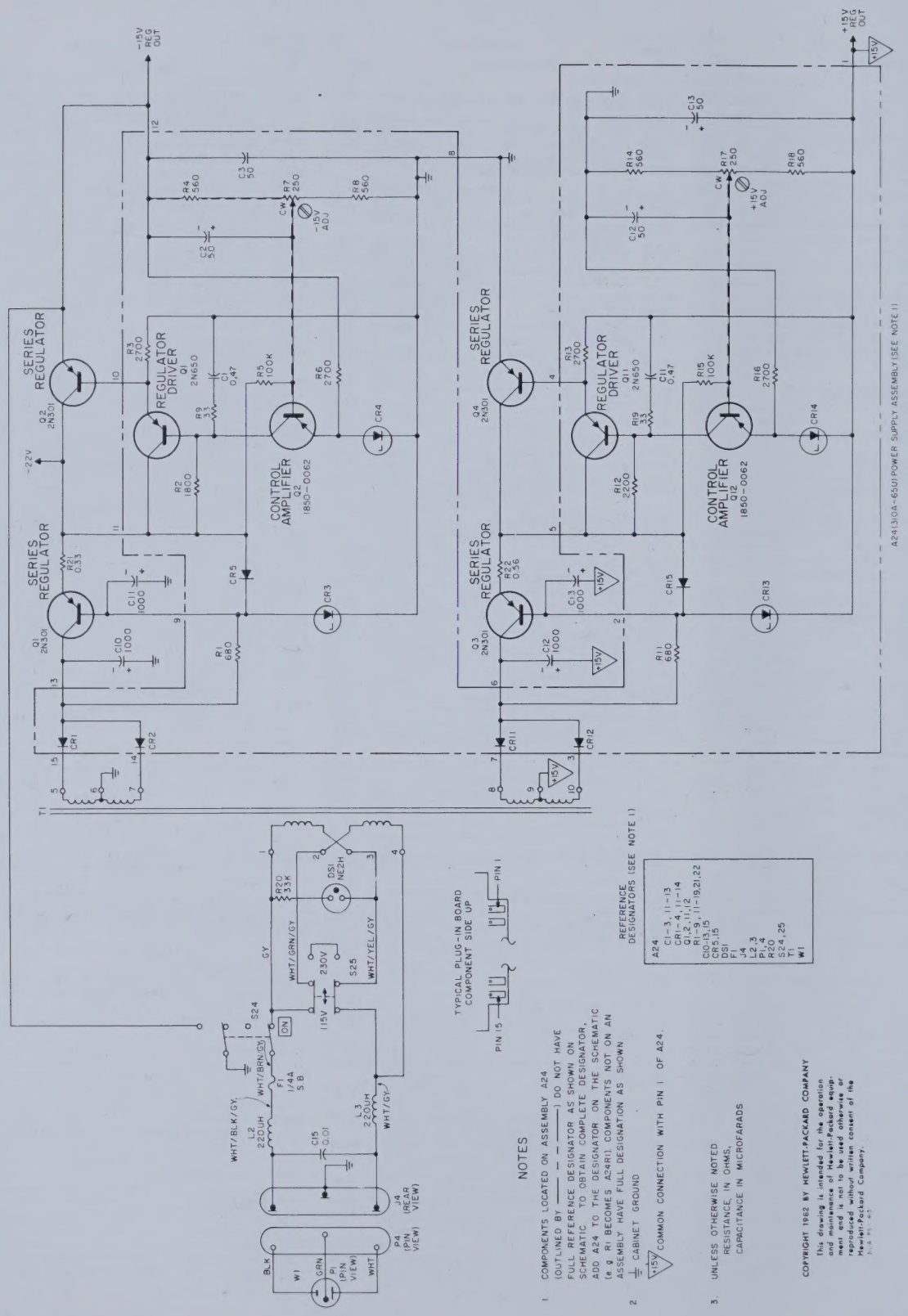

Figure 1A. Power Supply (for serial numbers 404-00560 through 312-)

MANUAL BACKDATING
MODEL 310A
WAVE ANALYZER
Serials Prefixed: 948-

This manual backdating sheet makes this manual applicable to earlier instruments. Instrument component values that differ from those in the manual, yet are not listed in the backdating sheet, should be replaced using the part number given in the manual.

SERIAL PREFIX OR NUMBER	MAKE MANUAL CHANGES
312-	1-9
325-	2-9
404-	3-9
415-	4-9

SERIAL PREFIX OR NUMBER	MAKE MANUAL CHANGES
436-	5-9
452-	6-9
507-	7-9
948-02859 & below	8, 9
948-02884 & below	9

Change 1: For instruments serial numbered 312-00181 to 312-00285, a 3/8-inch-diameter hole is not provided and must be drilled or punched for the addition of Option 01 100-kc Crystal Calibrator. Refer to Appendix II (Service Note 310A-1A details the exact location of this hole).

Change 2: (see Note 1)

Figure 5-21, Meter, BFO, Restored Frequency Output:
Change A21C9 from 200 pF to 82 pF.

Table 6-1, Reference Designation Index:
A21C8: Change HP Stock No. from 0180-0076 to 0180-0045 (however, note that 0180-0076 is the recommended replacement).

Change: A21C9 to HP Stock No. 0140-0006; C:fxd 82 pF 10% 300 VDCW.

Table 6-2, Replaceable Parts:
Delete: HP Stock No. 0140-0090.
Change the "TQ" for HP Stock No. 0180-0076 to 1.
Add: HP Stock No. 0140-0006; C:fxd 82 pF 10% 300 VDCW; Mfr 00853; Mfr Part No. RCM15E820K; TQ 1.

NOTE 1

12- to 20-Mc oscillations are sometimes found in the output amplifier .... the solution to this problem is to replace A21C9 with 200 pF capacitor (HP Stock No. 0180-0076). See Table 6-2 for description.

Change 3: (See Note 2)

Figure 5-25, Power Supply:
Replace with Figure 1A.

Table 6-1, Reference Designation Index:
Delete: A24CR5, A24CR15, A24R9, A24R19, R21, R22.

Change: A24C1, A24C3, and A24C11 to HP Stock No. 0150-0084; C:fxd ceramic 0.1 μF +80%, -20% 50 VDCW.

Add: C14, HP Stock No. 0180-0056; C:fxd electr 1000 μF 50 VDCW

(Cont'd)

Table 6-2, Replaceable Parts:
Delete: HP Stock Numbers 0687-3301, 0812-0019, 0812-0022, and 1901-0026.
Change the "TQ" for HP Stock No. 0180-0056 from 4 to 5; 0160-0174 from 6 to 4; 0180-0058 from 14 to 13.

NOTE 2

The power supply in instruments Serial Prefixed 415 and above is protected against short circuits. The power supply in earlier models may be modified or replaced with a new supply. A new supply board may be ordered as part of the power supply modification kit, Stock Number 00310-600. Hewlett-Packard Service Note 310A-2 describes power supply modification for over-current protection.

(See Note 3)
Figure 5-19, Active LPF, Second Mixer Pair:
Delete: A13C3, A13C4, A13R23, A13R24, A14C3, A14C4, A14R23, and A14R24.
Change: A13C2 and A14C2 from 510 pF to 220 pF.

Table 6-1, Reference Designation Index:
Delete: A13C3, A13C4, A13R23, A13R24, A14C3, A14C4, A14C23, and A14R24.
Change A13C2 and A14C2 to HP Stock No. 0140-0083; C:fxd mica 220 pF 5% 300 VDCW.

Table 6-2, Replaceable Parts:
Delete: HP Stock No. 0140-0017, and HP Stock No. 0160-0362.
Change: the "TQ" for HP Stock No. 0687-3311 from 4 to 2.
Add: HP Stock No. 0140-0083, C:fxd mica 220 pF 5% 300 VDCW; Mfr 28480; Mfr Part No. 0140-0083; TQ 2.

NOTE 3

The manufacturer of the transistors used in the LOW PASS IF AMPLIFIER CIRCUITS (A13 and A14 assemblies) has changed the Alpha Cutoff Frequency characteristic. If any transistors are changed in either of these two circuits, oscillations may occur. If oscillation occurs, add resistors R23, R24, and capacitors C3 and C4 as shown in Figure 5-19. Also, change the value of C2 to 510 pF. If oscillations do not occur, let circuit remain as indicated above.

Change 5:

Page 1-0, Table 1-1, RECORDER OUTPUT:
Change statement to read: "1 mA dc into 1500 ohms or less for single ended recorders."

Page 5-31/5-32, Figure 5-21, Meter, BFO, Restored Frequency Output Schematic:
Change A17C11 from 50 μF to 200 μF.
Delete R62, 100 ohms.
Add connection between J2 shorting contact and ground.

Table 6-1:
Change A17C11 stock number and description to read as follows: 0180-0060 C:FXD ELECT 500 μF -10% +100% 3 VDCW.
Delete R62.

Change 6:

Table 6-1: Change stock number of A18S1 to 3100-0362.

Change 7:

Page 5-35/5-36, Figure 5-25, Power Supply Schematic:
Change A24R4, R8, R14, R18 to 560 ohms.

Table 6-1:
Change description of A24R4, R8, R14, R18 to read: 0687-5611 R:FXD COMP 560 ohm 10% 1/2W.
Change description of A7CR1 and A7CR2 to read: 0122-0001 VARICAPACITOR: SIL 100 pF 20% 20 VDCW.

Change 8: Table 6-1:
Change Part No. of J4 to 1251-0148. Change Part No. of W1 to 8120-0078. Change Part No. of MP12 to 310A-2B.

Table 6-2:
Change Part No. 1251-2357 to 1251-0148. Change Part No. 8120-1348 to 8120-0078. Change Part No. 310A-2E to 310A-2B.

Change 9: Table 6-1:
Change Part No. of F1 to 2110-0018. Change Part No. of S25 to 3101-0033.

Table 6-2:
Change Part No. 2110-0201 to 2110-0018. Change Part No. 3101-1234 to 3101-0033.

APPENDIX II

OPTION 01

The 310A-Option 01 instruments use a 100 kc Crystal Oscillator in place of the 100 kc calibration multivibrator (A3Q1, A3Q2, and associated components). The 100 kc Crystal Oscillator may be used for both amplitude and frequency calibration.

The Option 01 calibration oscillator circuit, with the exception of push-button switch S50 and crystal Y51, is mounted on the same circuit board (A3) as is the standard circuit. The Option 01 details of special wiring, crystal mounting location, testing procedures, replaceable parts identification, and circuit schematic diagram are included in Service Note (#310A-1A) which is printed in this appendix.

SPECIFICATIONS

The specifications for the Model 310A Option 01 are the same as those of the standard Model 310A except for the frequency accuracy of the calibrator, which is as follows:

FREQUENCY ACCURACY
±2 kc to 1.4 Mc
±3 kc to 1.5 Mc

OPERATION

When MARKER switch S50 is depressed, the harmonics of the 100 kc oscillator may be observed on the output meter. Select the one closest to the frequency of interest. With MODE at NORMAL and BANDWIDTH at 200 cps, adjust ZERO SET for maximum meter indication. Set RANGE for an on-scale reading.

SERVICE NOTE 310A-1A

hp MODEL 310A WAVE ANALYZER
All Serials

INSTALLATION OF 100 KC CRYSTAL CALIBRATOR KIT
hp Stock No. 310A-95A

This Service Note outlines the procedure for installing a 100 KC Crystal Calibrator Kit in hp Model 310A Wave Analyzers, all serials.

Installation of this kit converts your regular hp Model 310A to an hp Model 310A, Option 01 instrument which has the following calibrator specifications: CALIBRATOR FREQUENCY ACCURACY: ±2 KC to 1.4 mc; ±3 KC to 1.5 mc.

This modification includes replacement of the 100 KC calibration multivibrator with a 100 KC crystal oscillator which may be used for both frequency and amplitude calibration of your hp Model 310A.

No special tools or test equipment are required for modification.

PARTS SUPPLIED IN KIT, hp STOCK NO. 310A-95A

Quantity	Description	hp Stock No.
1	Board assembly, input amplifier calibrator	310A-65T
1	Crystal, 100 KC	0410-0088
1	Bracket, crystal mounting	310A-12H
1	Cable assembly, marker	310A-16W
1	Tube socket	1200-0020
1	Tube clamp	1400-0033
1	Switch, pushbutton	3101-0051
1	Plate, identification	7120-0170
1	Wire, 26 gauge stranded, yellow, 9 inch length	8150-0065
1	Wire, 26 gauge stranded, green, 9 inch length	8150-0052
1	Wire, 26 gauge stranded, white-black-violet, 4 inch length	8150-0193
3	Machine screw, 6-32 x 3/8 inch with lockwasher	2390-0007
3	Nut, 6-32 x 1/4 inch	2420-0003
3	Lockwasher, #6, internal	2190-0007
1	Lockwasher, 3/8" internal	2190-0016
1	Nut, lamp indicator	1450-0044
1	Nut, hex	2950-0030

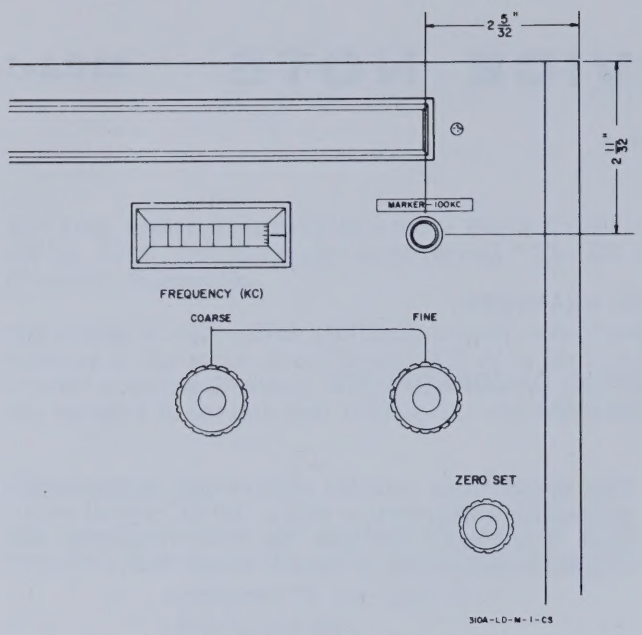

Figure 1. ⓗⓟ Model 310A, Pushbutton Switch Location

INSTALLATION PROCEDURE

1. Disconnect power and remove power cord.

2. Remove top, bottom and both side covers.

3a. Instrument Serial No. 312-00285 and below:

Drill or punch a 3/8'' diameter hole in the front panel. Refer to Figure 1 for hole location.

b. Instrument Serial No. 325-00286 and above:

Remove plug button from 3/8'' diameter hole in front panel.

4. Solder the 24 inch long 4-wire cable assembly (310A-16W) to the pushbutton switch assembly. Refer to inset in Figure 2.

5. Mount the pushbutton switch to the panel as illustrated in Figure 2 inset.

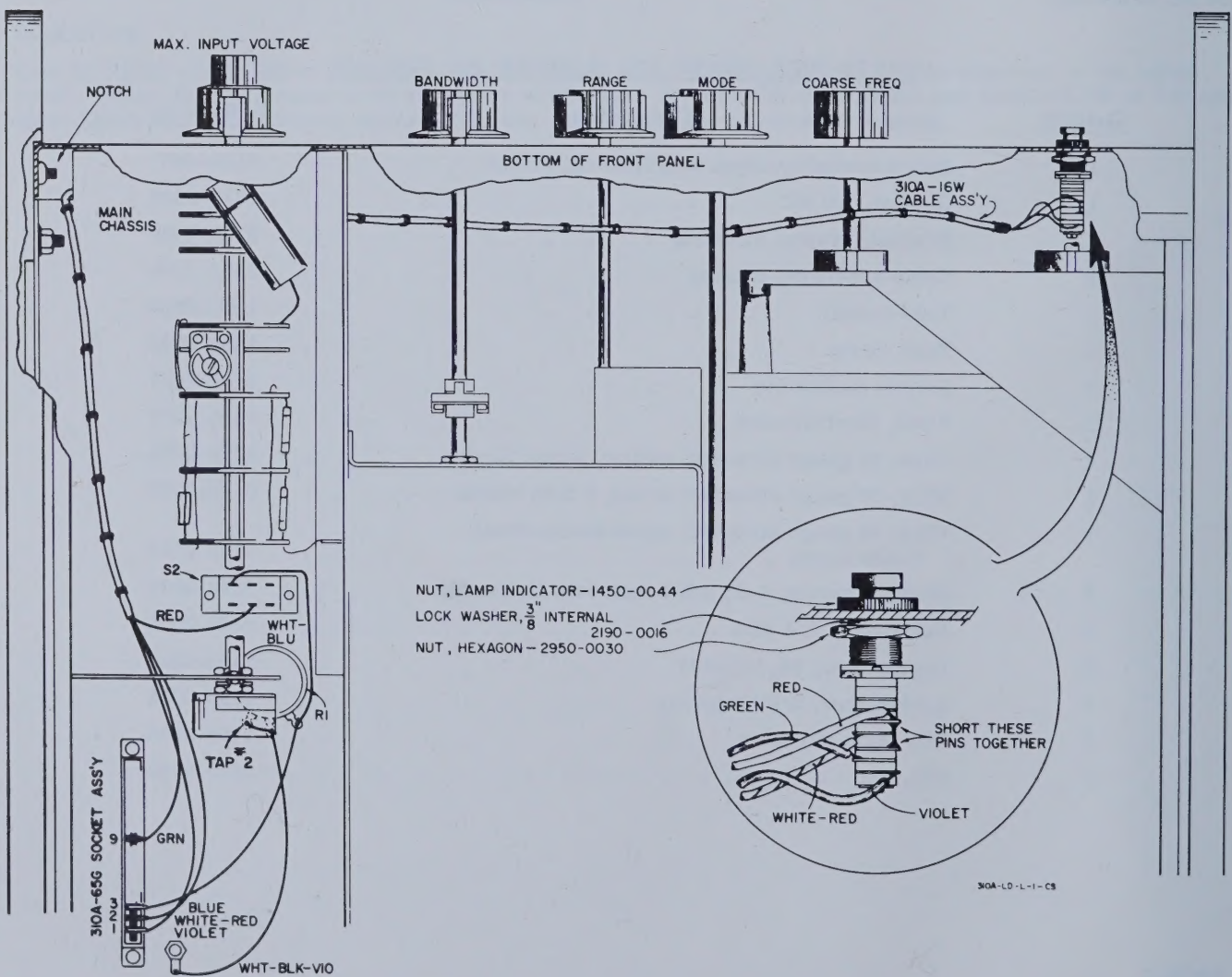

Figure 2. ⓗⓟ Model 310A, Pushbutton Switch Assembly, Wiring and Cable Layout

6. Dress the cable assembly behind the front panel to the left side of the 310A, then through the notch in the main chassis next to the left side frame. Continue dressing cable to location of 310A-65G socket assembly. Refer to Figure 2.

7. Remove and retain board assembly, 310A-65G.

8a. Instrument Serial No. 312-00285 and below:

1. Remove the white-blue wire from the center tap of R1, 75 ohm pot, and connect it to the same tap on R1 to which the blue wire from pin 3 of the 310A-65G socket is connected.
2. Remove and discard the violet wire connected between tap #2 (see Figure 2) on R1 and Pin 1 of the 310A-65G socket.
3. Short the center tap and #2 tap on R1 and connect the #26 white-black-violet 4 inch wire from this point to the ground lug near pin 1 of the 310A-65G socket.

b. Instrument Serial No. 325-00286 and above:

Remove the white-black-violet wire (connecting the center tap and tap #2 of R1 with pin 1 of the 310A-65G socket) from pin 1 of the 310A-65G socket and connect it to the ground lug near pin 1. See Figure 2.

9. Connect the 4-wire cable assembly (310A-16W) from the pushbutton switch as follows:

a. Violet to pin 1 on the 310A-65G socket assembly.

b. White-red to pin 2 on the 310A-65G socket assembly.

c. Green to pin 9 on the 310A-65G socket assembly.

d. Red to terminal on S2 indicated in Figure 2.

10. Mount the tube socket and the tube clamp on the crystal mounting bracket as shown in Figure 3.

11. Connect the nine inch green wire to pin 2 on tube socket.

12. Connect the nine inch yellow wire to pin 6 on tube socket.

13. Remove the extender board assembly, M-65A (new Stock No. 5060-0049) shown in Figure 3. Retain the board and the mounting hardware.

14. Using the hardware removed in step 13, mount the crystal socket assembly bracket to the chassis as shown in Figure 3.

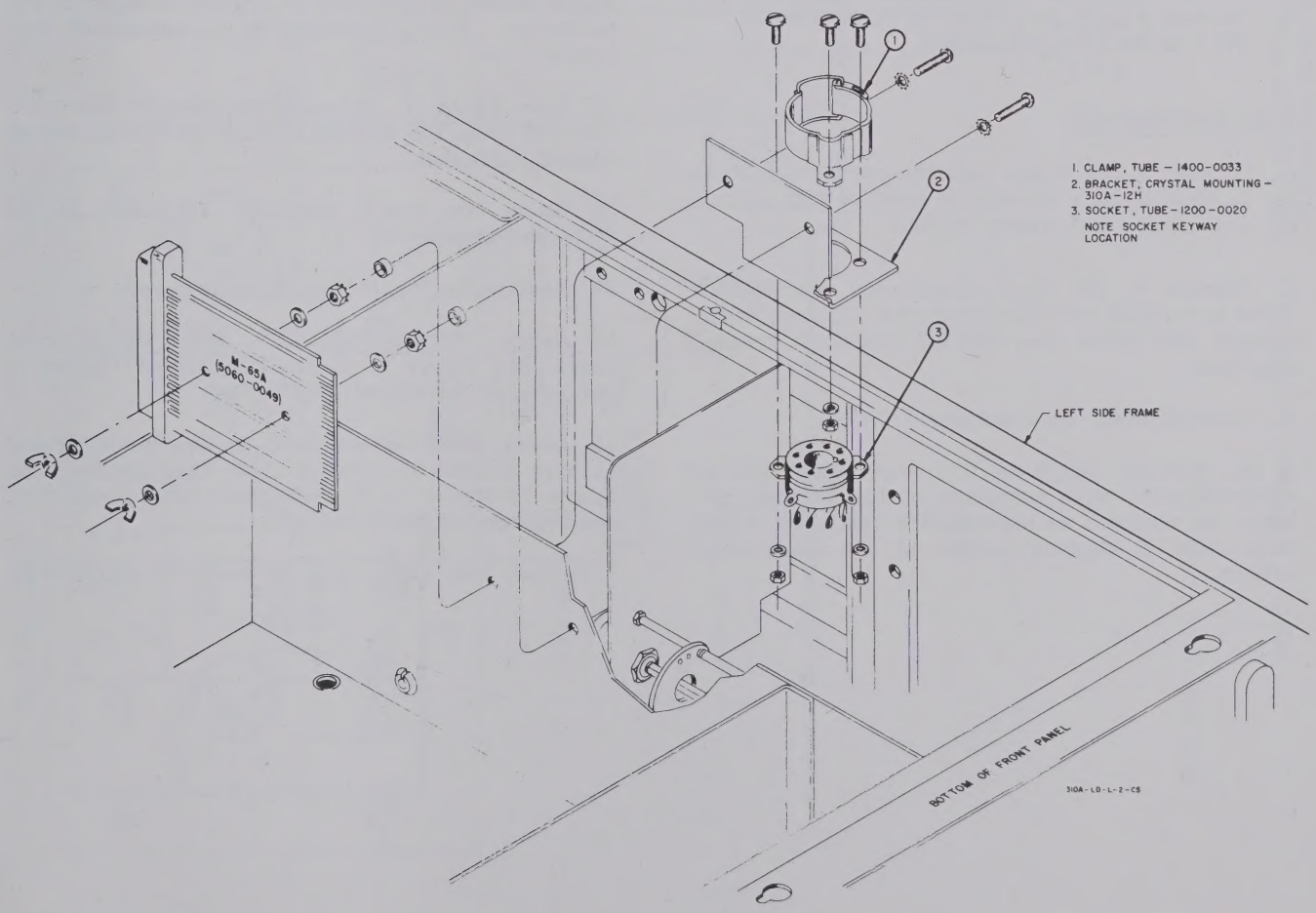

Figure 3. hp Model 310A, Crystal Socket Assembly

15. Insert the extender board assembly in the 310A-65G socket.

16. Insert the new board assembly, 310A-65T in the extender board socket.

17. Remove the "quick disconnect" connectors attached to the two long pins protruding from the "solder" side of the 310A-65T board assembly and solder to the yellow and green wires from the tube socket.

18. Slip the connectors over the long pins on the board assembly.

Note

They can be connected either way.

19. Insert the crystal (0410-0088) into the tube socket.

20. Check wiring to ensure conformance with the schematic Figure 4.

Note

After the modification has been completed, the 310A-65G Board Assembly can be reinserted in place of the 310A-65T and the 310A can be operated as a regular instrument if the white-black-violet wire connected between R1 and the ground lug is returned to pin 1 of the 310A-65G socket.

TEST PROCEDURE

1. Connect a 100 K ohm variable resistor, hp Stock No. 2100-0063, as a rheostat in parallel with capacitor C54. (Use short jumper wires.)

2. Connect a X50 (low capacitance) oscilloscope probe in parallel with Capacitor C54. Use any oscilloscope with better than 100 KC bandwidth vertical amplifier.

3. Connect power cord and turn 310A on.

4. Set RANGE switch to CAL and adjust C54 for maximum sine wave amplitude on the oscilloscope. Vary the rheostat as necessary to maintain a sine wave with no clipping visible on the oscilloscope pattern.

5. Remove the oscilloscope probe and rheostat.

6. Connect the oscilloscope probe between the collector of Q53 and ground. A square wave with 40% - 60% symmetry should be observed. If not, troubleshoot Schmitt Trigger circuit.

7. Depress the pushbutton. The square wave should be differentiated into sharp marker pulses. If not, troubleshoot circuit between Schmitt Trigger and Q5 amplifier.

8. Release pushbutton and disconnect oscilloscope probe.

9. Set FREQUENCY to 100 KC and the ABSOLUTE-RELATIVE switch to ABSOLUTE.

10. Adjust Cal Level Adj. (R1) for full scale meter reading.

11. Depress pushbutton and adjust C56 for approximately 90% full scale meter reading.

12. Repeat steps 10 and 11 until a 100% reading is obtained with the pushbutton released and a 90% reading is obtained with the pushbutton depressed.

13. With the pushbutton depressed, tune the FREQUENCY through the full range. The meter reading should be 30% of full scale or greater at each 100 KC harmonic. If not, troubleshoot all associated circuitry.

14. Turn 310A off. Remove the extender board and remount it on the screws holding the crystal socket assembly bracket.

15. Insert the board assembly 310A-65T in the 310A-65G socket.

16. Replace the top, bottom and side covers.

17. Attach "Marker 100 KC" metal tag to front panel. See Figure 1. A small amount of "Xylene"* will activate the adhesive on the tag.

18. Attach this Service Note to the Operating and Service Manual for your hp 310A Wave Analyzer for future reference to the schematic, test procedure, and replaceable parts list.

* Xylene, one gallon can, hp Stock No. 8500-0041.

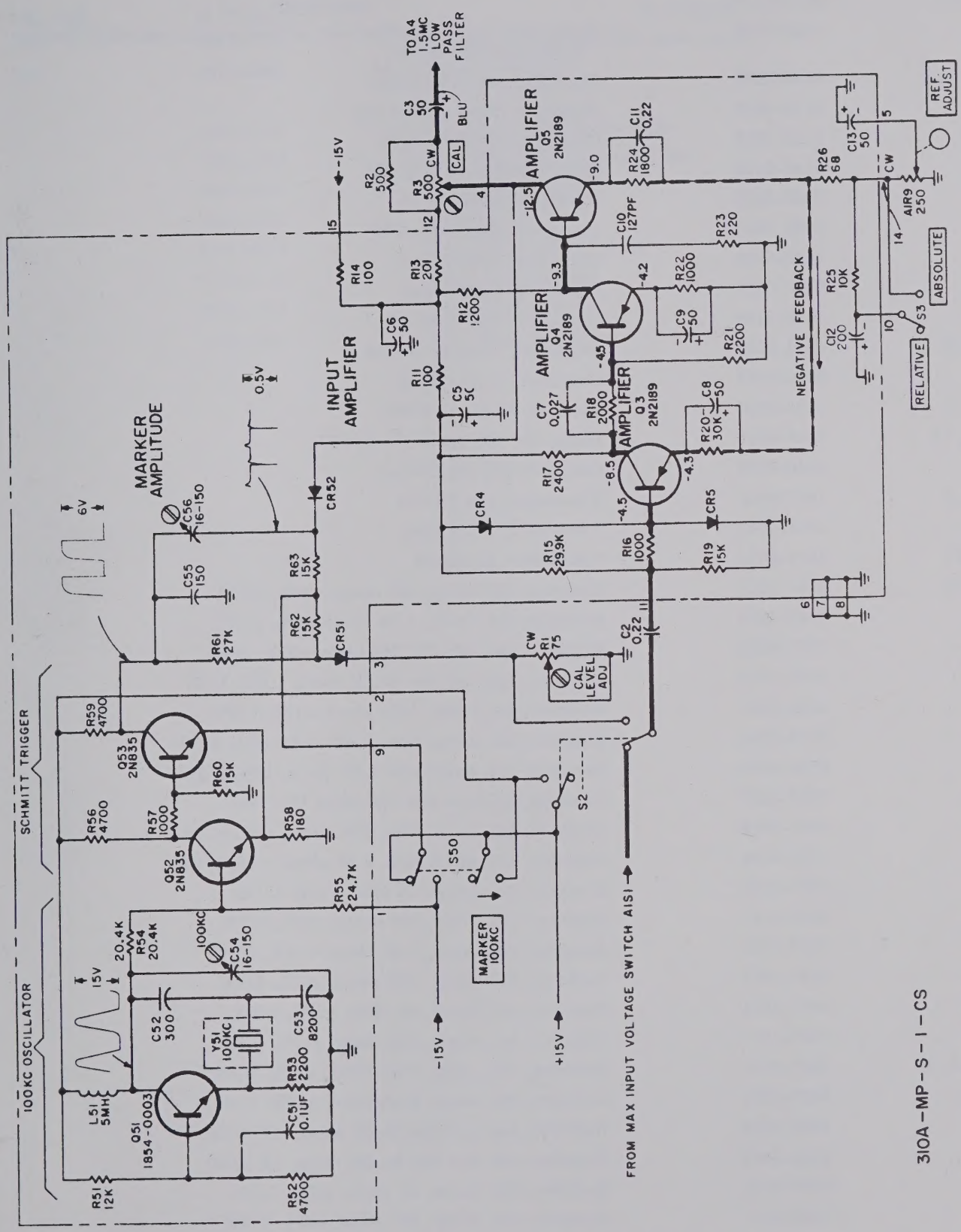

Figure 4. Model 310A Option 01 Input Amplifier-Frequency and Amplitude Calibrator Assembly, Stock No. 310A-65T

REPLACEABLE PARTS LIST

Ckt. Ref.	hp Stock No.	Description
	310A-65T	Board assy, Input amplifier and calibrator (this assembly consists of the following parts).
C5, 6, 13	0180-0058	Capacitor, fixed 50 μf 25V
C7	0170-0066	Capacitor, fixed .027 μf 10%
C8, 9	0180-0033	Capacitor, fixed 50 μf 6V
C10	0140-0110	Capacitor, fixed 127 pf 2%
C11	0160-0200	Capacitor, fixed .22 μf
C12	0180-0060	Capacitor, fixed 200 μf 3V
C51	0170-0085	Capacitor, fixed 0.1 μf
C52	0140-0225	Capacitor, fixed 300 pf
C53	0140-0184	Capacitor, fixed 8200 pf
C54, 56	0131-0004	Capacitor, variable 16-150 pf
C55	0140-0196	Capacitor, fixed, 150 pf
CR4, 5	1901-0040	Diode Si: 30 ma 13.5 PIV
CR51, 52	1910-0016	Diode, Ge: 100 ma at 1V, 60 PIV
L51	9140-0072	Coil, RF 5000 mh 100 ma
Q3, 4, 5	1853-0020	Transistor, Ge: 2N2189
Q51	1854-0003	Transistor, Si: Special
Q52, 53	1854-0011	Transistor, Si: 2N835
R11, 14	0687-1011	Resistor, fxd, comp, 100 ohms, ±10%, 1/2W
R12	0687-1221	Resistor, fxd, comp, 1.2K ohms ±10%, 1/2W
R13	0757-0718	Resistor, fxd, met flm 200 ohms 1.0%, 1/4W
R15	0757-0341	Resistor, fxd, met flm 30.1K ohms 1.0%, 1/4W
R16	0690-1021	Resistor, fxd, comp, 1000 ohms, ±10%, 1/2W
R17	0758-0034	Resistor, fxd, metal film, 2.4K ohms, ±5%, 1/2W
R18	0758-0033	Resistor, fxd, metal film 2.0K ohms, ±5%, 1/2W
R19	0757-0757	Resistor, fxd, met flm 15K ohms 1% 1/4W
R20	0758-0079	Resistor, fxd, metal film, 30K ohms, ±5%, 1/2W
R21	0758-0044	Resistor, fxd, metal film, 2.2K ohms, ±5%, 1/2W
R22	0687-1021	Resistor, fxd, comp, 1K ohm, ±10%, 1/2W
R23	0687-2211	Resistor, fxd, comp, 220 ohms, ±10%, 1/2W
R24	0687-1821	Resistor, fxd, comp, 1.8K ohms, ±10%, 1/2W
R25	0687-1031	Resistor, fxd, comp, 10K ohms, ±10%, 1/2W
R26	0687-6801	Resistor, fxd, comp, 68 ohms, ±10%, 1/2W
R51	0687-1231	Resistor, fxd, comp, 12K ohms, ±10%, 1/2W
R52, 56, 59	0687-4721	Resistor, fxd, comp, 4.7K ohms, ±10%, 1/2W
R53	0687-2221	Resistor, fxd, comp, 2.2K ohms, ±10%, 1/2W
R54	0698-3222	Resistor, fxd, met flm 20.5K ohms, 1% 1/4W
R55	0698-3217	Resistor, fxd, met flm 24.9K ohms, 1% 1/4W
R57	0687-1021	Resistor, fxd, comp, 1K ohms, ±10%, 1/2W
R58	0687-1811	Resistor, fxd, comp, 180 ohms, ±10%, 1/2W
R60, 62, 63	0687-1531	Resistor, fxd, comp, 15K ohms, ±10%, 1/2W

REPLACEABLE PARTS LIST (Cont'd)

Ckt. Ref.	hp Stock No.	Description
R61	0687-2731	Resistor, fxd, comp, 27K ohms, ±10%, 1/2W
Y51	0410-0088	Crystal, 100KC
	1251-0162	Connector, male, printed ckt
	1251-0163	Connector, female, printed ckt
	1200-0020	Socket, tube, octal
	1400-0033	Clamp, tube
	3101-0051	Switch, pushbutton, DPDT
	7120-0170	Plate, identification
	310A-12H	Bracket, crystal mtg
	310A-16W	Cable assy, marker

SERVICE NOTE 310A-2

hp MODEL 310A WAVE ANALYZERS
SERIALS BELOW 415-00561

POWER SUPPLY MODIFICATION KIT
hp Stock No. 00310-601

This Service Note provides the information necessary for modifying the Power Supplies in hp Model 310A Wave Analyzers, serials below 415-00561 for improved short circuit protection.

The modification consists of changing the values of three capacitors and adding four resistors and two diodes.

Upon completion of the modification the power supplies will have to be adjusted in accordance with the instructions in the Operating and Service Manual for your hp Model 310A. No special tools are required for this modification.

Parts Furnished in Power Supply Mod Kit
hp 00310-601

Quantity	Description	hp Stock Number
2	CAPACITOR, Fixed Ceramic, 0.47 +80%, -20%, 25VDCW For C1 and C11	0160-0174
2	RESISTORS, Fixed Composition, 33 ohms ±10%, 1/2 watt For R9 and R19	0687-3301
1	RESISTOR, Fixed Wire Wound 0.33 ohms ±5%, 3 watts For R21	0812-0019
1	RESISTOR, Fixed Wire Wound 0.56 ohms, ±5%, 3 watts For R22	0812-0022
2	DIODE, Silicon, 200 PIV, 0.5 ma. For CR5 and CR15	1901-0026
1	CAPACITOR, Fixed Electrolytic 50μf, -10% +100%, 25 VDCW For C3	0180-0058

MODIFICATION PROCEDURE

1. Disconnect power, remove top and bottom covers.

2. Remove the Power Supply Board 310A-65A.

3. On 310A-65A, remove and discard C1, C11, and C3.

4. Install the 50 μf, 25v Electrolytic in place of C3.

5. Install the two 0.47 μf, 25v ceramic capacitors in place of C1 and C11.

6. On the foil side of 310A-65A remove approximately 1/4 inch of foil connecting C1 to Q1, and 1/4 inch of foil connecting C11 to Q11.

7. Solder the two 33 ohm resistors to the foil side of the board between C1 and Q1 and between C11 and Q11.

8. Remove and discard wire between emitter of Q1 and collector of Q2 on chassis.

9. Connect the 0.33 ohm resistor R21 between the emitter of Q1 and the collector of Q2.

10. Connect Diode CR5 cathode to the base of Q1. Connect the Anode to the collector of Q2.

11. Remove and discard wire between the emitter of Q3 and collector of Q4.

12. Connect the 0.56 ohm resistor R22 between emitter of Q3 and collector of Q4.

13. Connect CR15 cathode to base of Q3. Connect Anode to collector of Q4.

14. Remove and discard the black wire and the purple wire connecting C14 to the terminal strip next to the Power Supply Assembly.

15. Remove and discard C14.

This completes the modification. The Power Supplies should be adjusted in accordance with the instructions in the Operating and Service Manual for your Wave Analyzer.

Note

The Modified Power Supply is now equivalent to the hp Stock Number 310A-65U Power Supply Assembly. The only difference is that Diodes CR5 and CR15 are mounted on the hp 310A-65U Assembly.

Save this Service Note for future reference when servicing the Power Supply in your Wave Analyzer.

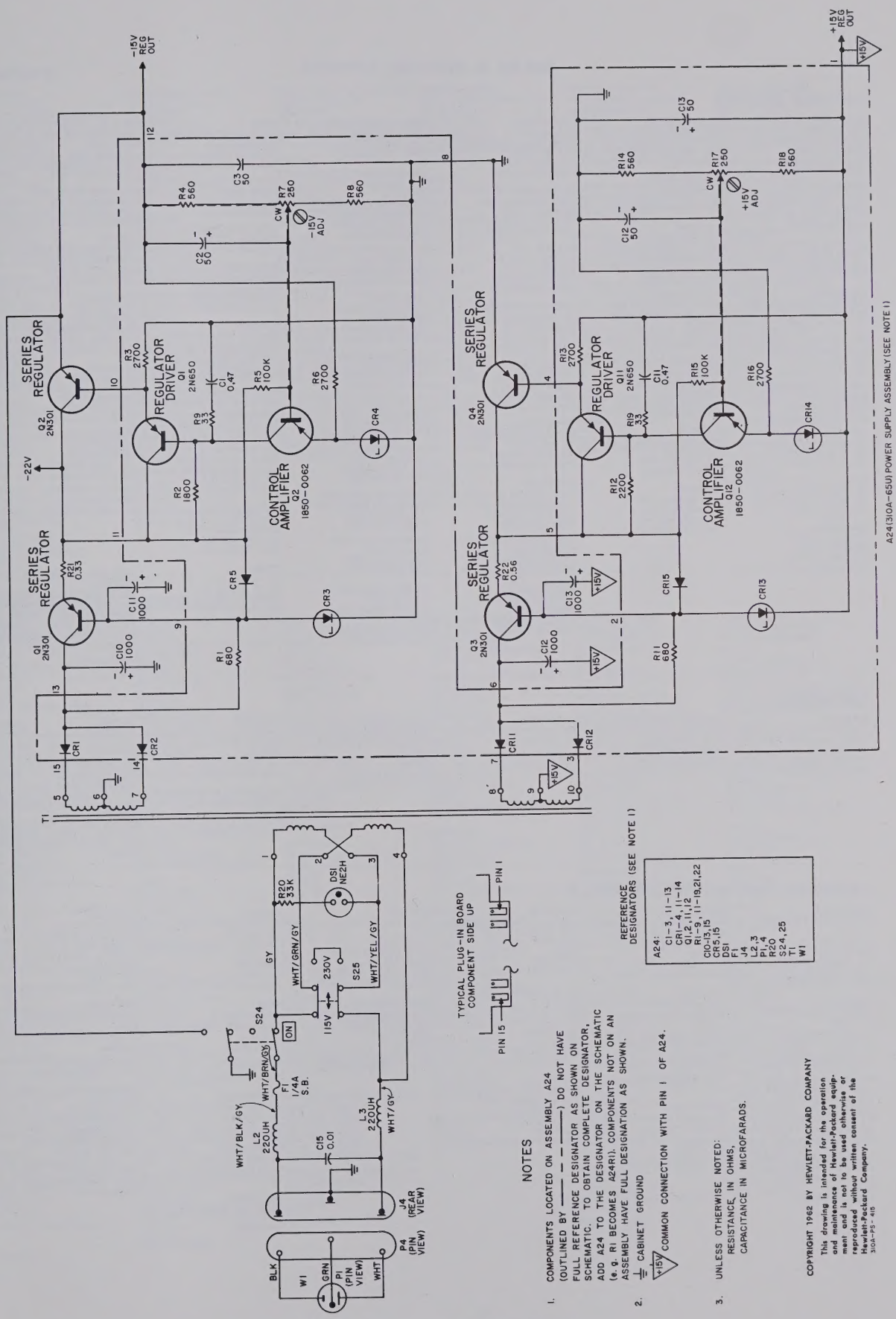

Figure 1. Power Supply After Modification

SALES & SERVICE OFFICES

UNITED STATES

ALABAMA
P.O. Box 4207
2003 Byrd Spring Road S.W.
Huntsville 35802
Tel: (205) 881-4591
TWX: 810-726-2204

ARIZONA
2336 E. Magnolia St.
Phoenix 85034
Tel: (602) 252-5061
TWX: 910-951-1330

5737 East Broadway
Tucson 85716
Tel: (602) 298-2313
TWX: 910-952-1162

CALIFORNIA
1430 East Orangethorpe Ave.
Fullerton 92631
Tel: (714) 870-1000

3939 Lankershim Boulevard
North Hollywood 91604
Tel: (213) 877-1282
TWX: 910-499-2170

1101 Embarcadero Road
Palo Alto 94303
Tel: (415) 327-6500
TWX: 910-373-1280

2220 Watt Ave.
Sacramento 95825
Tel: (916) 482-1463
TWX: 910-367-2092

9606 Aero Drive
San Diego 92123
Tel: (714) 279-3200
TWX: 910-335-2000

COLORADO
7965 East Prentice
Englewood 80110
Tel: (303) 771-3455
TWX: 910-935-0705

CONNECTICUT
508 Tolland Street
East Hartford 06108
Tel: (203) 289-9394
TWX: 710-425-3416

111 East Avenue
Norwalk 06851
Tel: (203) 853-1251
TWX: 710-468-3750

FLORIDA
P.O. Box 24210
2806 W. Oakland Park Blvd.
Ft. Lauderdale 33307
Tel: (305) 731-2020
TWX: 510-955-4099

P.O. Box 20007
Herndon Station 32814
621 Commonwealth Avenue
Orlando
Tel: (305) 841-3970
TWX: 810-850-0113

GEORGIA
P.O. Box 28234
450 Interstate North
Atlanta 30328
Tel: (404) 436-6181
TWX: 810-766-4890

ILLINOIS
5500 Howard Street
Skokie 60076
Tel: (312) 677-0400
TWX: 910-223-3613

INDIANA
3839 Meadows Drive
Indianapolis 46205
Tel: (317) 546-4891
TWX: 810-341-3263

LOUISIANA
P.O. Box 856
1942 Williams Boulevard
Kenner 70062
Tel: (504) 721-6201
TWX: 810-955-5524

MARYLAND
6707 Whitestone Road
Baltimore 21207
Tel: (301) 944-5400
TWX: 710-862-0850

P.O. Box 1648
2 Choke Cherry Road
Rockville 20850
Tel: (301) 948-6370
TWX: 710-828-9684

MASSACHUSETTS
32 Hartwell Ave.
Lexington 02173
Tel: (617) 861-8960
TWX: 710-326-6904

MICHIGAN
24315 Northwestern Highway
Southfield 48075
Tel: (313) 353-9100
TWX: 810-224-4882

MINNESOTA
2459 University Avenue
St. Paul 55114
Tel: (612) 645-9461
TWX: 910-563-3734

MISSOURI
11131 Colorado Ave.
Kansas City 64137
Tel: (816) 763-8000
TWX: 910-771-2087

2812 South Brentwood Blvd.
St. Louis 63144
Tel: (314) 962-5000
TWX: 910-760-1670

NEW JERSEY
W. 120 Century Road
Paramus 07652
Tel: (201) 265-5000
TWX: 710-990-4951

1060 N. Kings Highway
Cherry Hill 08034
Tel: (609) 667-4000
TWX: 710-892-4945

NEW MEXICO
P.O. Box 8366
Station C
6501 Lomas Boulevard N.E.
Albuquerque 87108
Tel: (505) 265-3713
TWX: 910-989-1665

156 Wyatt Drive
Las Cruces 88001
Tel: (505) 526-2485
TWX: 910-983-0550

NEW YORK
1702 Central Avenue
Albany 12205
Tel: (518) 869-8462
TWX: 710-441-8270

1219 Campville Road
Endicott 13760
Tel: (607) 754-0050
TWX: 510-252-0890

82 Washington Street
Poughkeepsie 12601
Tel: (914) 454-7330
TWX: 510-248-0012

39 Saginaw Drive
Rochester 14623
Tel: (716) 473-9500
TWX: 510-253-5981

1025 Northern Boulevard
Roslyn, Long Island 11576
Tel: (516) 869-8400
TWX: 510-223-0811

5858 East Molloy Road
Syracuse 13211
Tel: (315) 454-2486
TWX: 710-541-0482

NORTH CAROLINA
P.O. Box 5188
1923 North Main Street
High Point 27262
Tel: (919) 885-8101
TWX: 510-926-1516

OHIO
25575 Center Ridge Road
Cleveland 44145
Tel: (216) 835-0300
TWX: 810-427-9129

3460 South Dixie Drive
Dayton 45439
Tel: (513) 298-0351
TWX: 810-459-1925

1120 Morse Road
Columbus 43229
Tel: (614) 846-1300

OKLAHOMA
2919 United Founders Boulevard
Oklahoma City 73112
Tel: (405) 848-2801
TWX: 910-830-6862

OREGON
Westhills Mall, Suite 158
4475 S.W. Scholls Ferry Road
Portland 97225
Tel: (503) 292-9171
TWX: 910-464-6103

PENNSYLVANIA
2500 Moss Side Boulevard
Monroeville 15146
Tel: (412) 271-0724
TWX: 710-797-3650

1021 8th Avenue
King of Prussia Industrial Park
King of Prussia 19406
Tel: (215) 265-7000
TWX: 510-660-2670

RHODE ISLAND
873 Waterman Ave.
East Providence 02914
Tel: (401) 434-5535
TWX: 710-381-7573

TEXAS
P.O. Box 1270
201 E. Arapaho Rd.
Richardson 75080
Tel: (214) 231-6101
TWX: 910-867-4723

P.O. Box 22813
6300 Westpark Drive
Suite 100
Houston 77027
Tel: (713) 781-6000
TWX: 910-881-2645

231 Billy Mitchell Road
San Antonio 78226
Tel: (512) 434-4171
TWX: 910-871-1170

UTAH
2890 South Main Street
Salt Lake City 84115
Tel: (801) 487-0715
TWX: 910-925-5681

VERMONT
P.O. Box 2287
Kennedy Drive
South Burlington 05401
Tel: (802) 658-4455
TWX: 710-224-1841

VIRGINIA
P.O. Box 6514
2111 Spencer Road
Richmond 23230
Tel: (703) 285-3431
TWX: 710-956-0157

WASHINGTON
433-108th N.E.
Bellevue 98004
Tel: (206) 454-3971
TWX: 910-443-2303

***WEST VIRGINIA**
Charleston
Tel: (304) 768-1232

FOR U.S. AREAS NOT LISTED:
Contact the regional office nearest you: Atlanta, Georgia . . . North Hollywood, California . . . Paramus, New Jersey . . . Skokie, Illinois. Their complete addresses are listed above.

*Service Only

CANADA

ALBERTA
Hewlett-Packard (Canada) Ltd.
11745 Jasper Ave.
Edmonton
Tel: (403) 482-5561
TWX: 610-831-2431

BRITISH COLUMBIA
Hewlett-Packard (Canada) Ltd.
4519 Canada Way
North Burnaby 2
Tel: (604) 433-8213
TWX: 610-922-5059

MANITOBA
Hewlett-Packard (Canada) Ltd.
511 Bradford Ct.
St. James
Tel: (204) 786-7581
TWX: 610-671-3531

NOVA SCOTIA
Hewlett-Packard (Canada) Ltd.
2745 Dutch Village Rd.
Suite 203
Halifax
Tel: (902) 455-0511
TWX: 610-271-4482

ONTARIO
Hewlett-Packard (Canada) Ltd.
880 Lady Ellen Place
Ottawa 3
Tel: (613) 722-4223
TWX: 610-562-1952

Hewlett-Packard (Canada) Ltd.
50 Galaxy Blvd.
Rexdale
Tel: (416) 677-9611
TWX: 610-492-4246

QUEBEC
Hewlett-Packard (Canada) Ltd.
275 Hymus Boulevard
Pointe Claire
Tel: (514) 697-4232
TWX: 610-422-3022
Telex: 01-20607

FOR CANADIAN AREAS NOT LISTED:
Contact Hewlett-Packard (Canada) Ltd. in Pointe Claire, at the complete address listed above.

CENTRAL AND SOUTH AMERICA

ARGENTINA
Hewlett-Packard Argentina S.A.C.e.I
Lavalle 1171 - 3°
Buenos Aires
Tel: 35-0436, 35-0627, 35-0431
Telex: 012-1009
Cable: HEWPACKARG

BRAZIL
Hewlett-Packard Do Brasil I.e.C Ltda.
Rua Frei Caneca 1119
Sao Paulo - 3, SP
Tel: 288-7111, 287-5858
Cable: HEWPACK Sao Paulo

Hewlett-Packard Do Brasil I.e.C. Ltda.
Rua da Matriz 29
Botafogo ZC-02
Rio de Janeiro, GB
Tel: 246-4417
Cable: HEWPACK Rio de Janeiro

Hewlett-Packard Do Brasil Indústria e Comercia Ltda.
Praca Dom Feliciano 78
Salas 806-8
Porto Alegre RGS

CHILE
Héctor Calcagni y Cia, Ltda.
Bustos, 1932-3er Piso
Casilla 13942
Santiago
Tel: 4-2396
Cable: Calcagni Santiago

COLOMBIA
Instrumentacion
Henrik A. Langebaek & Kier Ltda.
Carrera 7 No. 48-59
Apartado Aereo 6287
Bogota, 1 D.E.
Tel: 45-78-06, 45-55-46
Cable: AARIS Bogota
Telex: 044-400

COSTA RICA
Lic. Alfredo Gallegos Gurdián
Apartado 3243
San José
Tel: 21-86-13
Cable: GALGUR San José

ECUADOR
Laboratorios de Radio-Ingenieria
Calle Guayaquil 1246
Post Office Box 3199
Quito
Tel: 12496
Cable: HORVATH Quito

EL SALVADOR
Electrónica
Apartado Postal 1589
27 Avenida Norte 1133
San Salvador
Tel: 25-74-50
Cable: ELECTRONICA San Salvador

GUATEMALA
Olander Associates Latin America
Apartado Postal 1226
Ruta 4, 6-53, Zona 4
Guatemala City
Tel: 63958
Cable: OLALA Guatemala City

MEXICO
Hewlett-Packard Mexicana, S.A. de C.V.
Moras 439
Col. del Valle
Mexico 12, D.F.
Tel: 575-46-49, 575-80-20, 575-80-30

NICARAGUA
Roberto Terán G.
Apartado Postal 689
Edificio Terán
Managua
Tel: 3451, 3452
Cable: ROTERAN Managua

PANAMA
Electrónico Balboa, S.A.
P.O. Box 4929
Ave. Manuel Espinosa No. 13-50
Bldg. Alina
Panama City
Tel: 30833
Cable: ELECTRON Panama City

PERU
Fernando Ezeta B.
Avenida Petit Thouars 4719
Miraflores
Casilla 3061
Lima
Tel: 45-2335
Cable: FEPERU Lima

PUERTO RICO
San Juan Electronics, Inc.
P.O. Box 5167
Ponce de Leon 154
Pda. 3-Pta. de Tierra
San Juan 00906
Tel: (809) 725-3342
Cable: SATRONICS San Juan
Telex: SATRON 3450 332

SURINAME
Surtel-Radio Holland N.V.
P.O. Box 155
Paramaribo

URUGUAY
Pablo Ferrando S.A.
Comercial e Industrial
Avenida Italia 2877
Casilla de Correo 370
Montevideo
Tel: 40-3102
Cable: RADIUM Montevideo

VENEZUELA
Hewlett-Packard De Venezuela C.A.
Apartado 50933
Caracas
Tel: 71.88.05, 71.88.69, 71.99.30
Cable: HEWPACK Caracas

FOR AREAS NOT LISTED, CONTACT:
Hewlett-Packard INTERCONTINENTAL
3200 Hillview Ave.
Palo Alto, California 94304
Tel: (415) 326-7000
(Feb. 71 493-1501)
TWX: 910-373-1267
Cable: HEWPACK Palo Alto
Telex: 034-8461

EUROPE

AUSTRIA
Unilabor GmbH
Wissenschaftliche Instrumente
Rummelhardtgasse 6
P.O. Box 33
Vienna A-1095
Tel: (222) 42 61 81, 43 13 94
Cable: LABORINSTRUMENT Vienna
Telex: 75 762

BELGIUM
Hewlett-Packard S.A. Benelux
348 Boulevard du Souverain
Brussels 1160
Tel: 72 22 40
Cable: PALOBEN Brussels
Telex: 23 494

DENMARK
Hewlett-Packard A/S
Datavej 38
DK-3460 **Birkerod**
Tel: (01) 81 66 40
Cable: HEWPACK AS
Telex: 66 40

Hewlett-Packard A/S
Torvet 9
DK-8600 **Silkeborg**
Tel: (06) 827-840

FINLAND
Hewlett-Packard Oy
Bulevardi 26
P.O. Box 12185
Helsinki 12
Tel: 13-730
Cable: HEWPACKOY-Helsinki
Telex: 12-1563

FRANCE
Hewlett-Packard France
Quartier de Courtaboeuf
Boite Postale No. 6
91 Orsay
Tel: 1-920 88 01
Cable: HEWPACK Orsay
Telex: 60048

Hewlett-Packard France
4 Quai des Etroits
69 **Lyon** 5ème
Tel: 78-42 63 45
Cable: HEWPACK Lyon
Telex: 31617

Hewlett-Packard France
29 rue de la Gara
F-31 **Blagnac**
Tel: (61) 85 82 29
Telex: 51957

GERMANY
Telex: 41 32 49 FRA
Berliner Strasse 117
6 **Nieder-Eschbach/Frankfurt 56**
Tel: (0611) 50 10 64
Cable: HEWPACKSA Frankfurt
Hewlett-Packard Vertriebs-GmbH

Hewlett-Packard Vertriebs-GmbH
Lietzenburgerstrasse 30
1 **Berlin** 30
Tel: (0311) 211 60 16
Telex: 18 34 05

Hewlett-Packard Vertriebs-GmbH
Herrenbergerstrasse 110
703 Böblingen, Württemberg
Tel: 07031-6671
Cable: HEPAG Böblingen
Telex: 72 65 739

Hewlett-Packard Vertriebs-GmbH
Achenbachstrasse 15
4 **Düsseldorf** 1
Tel: (0211) 68 52 58/59
Telex: 85 86 533

Hewlett-Packard Vertriebs-GmbH
Wendenstr. 23
2 **Hamburg** 1
Tel: (0411) 24 05 51/52
Cable: HEWPACKSA Hamburg
Telex: 21 53 32

Hewlett-Packard Vertriebs-GmbH
Reginfriedstrasse 13
8 **München** 9
Tel: (0811) 69 59 71/75
Cable: HEWPACKSA München
Telex: 52 49 85

GREECE
Kostas Karayannis
18, Ermou Street
Athens 126
Tel: 230301,3,5
Cable: RAKAR Athens
Telex: 21 59 62 RKAR GR

IRELAND
Hewlett-Packard Ltd.
224 Bath Road
Slough, Bucks, England
Tel: Slough 753-33341
Cable: HEWPIE Slough
Telex: 84413

ITALY
Hewlett-Packard Italiana S.p.A.
Via Amerigo Vespucci 2
20124 **Milano**
Tel: (2) 6251 (10 lines)
Cable: HEWPACKIT Milan
Telex: 32046

Hewlett-Packard Italiana S.p.A.
Palazzo Italia
Piazza Marconi 25
00144 **Rome** - Eur
Tel: 6-591 2544
Cable: HEWPACKIT Rome
Telex: 61514

NETHERLANDS
Hewlett-Packard Benelux, N.V.
Weerdestein 117
P.O. Box 7825
Amsterdam, Z 11
Tel: 020-42 7777
Cable: PALOBEN Amsterdam
Telex: 13 216

NORWAY
Hewlett-Packard Norge A/S
Box 149
Nesveien 13
N-1344 **Haslum**
Tel: 2-53 83 60
Cable: HEWPACK Oslo
Telex: 16621

PORTUGAL
Telectra
Empresa Tecnica de Equipamentos
Electricos, S.a.r.l.
Rua Rodrigo da Fonseca 103
P.O. Box 2531
Lisbon 1
Tel: 68 60 72
Cable: TELECTRA Lisbon
Telex: 1598

SPAIN
Enrique Larreta 12
Madrid, 16
Tel: 215 35 43
Cable: TELEATAIO Madrid
Ataio Ingenieros SA
Telex: 27249E

Ataio Ingenieros SA
Ganduxer 76
Barcelona 6
Tel: 211-44-66
Cable: TELEATAIO BARCELONA

SWEDEN (Jan 71)
Hewlett-Packard Sverige AB
Enighetsvägen 1-3
Fack
S-16120 **Bromma** 20
Tel: (08) 98 12 50
Cable: MEASUREMENTS Stockholm
Telex: 10721

Hewlett-Packard Sverige AB
Hagakersgatan 9C
S 431 04 **Mölndal** 4
Tel: 031 - 27 68 00

SWITZERLAND
Hewlett Packard Schweiz AG
Zurcherstrasse 20
8952 **Schlieren**
Zurich
Tel: (051) 98 18 21/24
Cable: HPAG CH
Telex: 53933

Hewlett Packard Schweiz A.G.
Rue du Bois-du-Lan 7
1217 Meyrin 2 **Geneva**
Tel: (022) 41 54 00
Cable: HEWPACKSA Geneva
Telex: 2 24 86

TURKEY
Telekom Engineering Bureau
P.O. Box 376
Karakoy
Istanbul
Tel: 49 40 40
Cable: TELEMATION Istanbul

UNITED KINGDOM
Hewlett-Packard Ltd.
224 Bath Road
Slough, Bucks
Tel: Slough (0753) 33341
Cable: HEWPIE Slough
Telex: 84413

Hewlett-Packard Ltd.
The Graftons
Stamford New Road
Altrincham, Cheshire
Tel: 061 928-8626
Telex: 668068

YUGOSLAVIA
Belram S.A.
83 avenue des Mimosas
Brussels 1150, Belgium
Tel: 34 33 32, 34 26 19
Cable: BELRAMEL Brussels
Telex: 21790

SOCIALIST COUNTRIES PLEASE CONTACT:
Correspondence Office for Eastern Europe
Innstrasse 23/2
Postfach
A1204 **Vienna,** Austria
Tel: (222) 3366 06/09
Cable: HEWPACK Vienna
Telex: 75923

ALL OTHER EUROPEAN COUNTRIES CONTACT:
Hewlett-Packard S.A.
Rue du Bois-du-Lan 7
1217 Meyrin 2 **Geneva**
Switzerland
Tel: (022) 41 54 00
Cable: HEWPACKSA Geneva
Telex: 2.24.86

AFRICA, ASIA, AUSTRALIA

ANGOLA
Telectra Empresa Técnia de Equipamentos Eléctricos SAR
Rua de Barbosa Rodrigues 42-1°
Box 6487
Luanda
Cable: TELECTRA Luanda

AUSTRALIA
Hewlett-Packard Australia Pty. Ltd.
22-26 Weir Street
Glen Iris, 3146
Victoria
Tel: 20.1371 (6 lines)
Cable: HEWPARD Melbourne
Telex: 31024

Hewlett-Packard Australia Pty. Ltd.
61 Alexander Street
Crows Nest 2065
New South Wales
Tel: 43.7866
Cable: HEWPARD Sydney
Telex: 21561

Hewlett-Packard Australia Pty. Ltd.
97 Churchill Road
Prospect 5082
South Australia
Tel: 65.2366
Cable: HEWPARD Adelaide

Hewlett Packard Australia Pty. Ltd.
2nd Floor, Suite 13
Casablanca Buildings
196 Adelaide Terrace
Perth, W.A. 6000
Tel: 21-3330
Cable: HEWPARD Perth

Hewlett-Packard Australia Pty. Ltd.
10 Woolley Street
P.O. Box 191
Dickson A.C.T. 2602
Tel: 49-8194
Cable: HEWPARD Canberra ACT

CEYLON
United Electricals Ltd.
P.O. Box 681
Yahala Building
Staples Street
Colombo 2
Tel: 5496
Cable: HOTPOINT Colombo

CYPRUS
Kypronics
19 Gregorios & Xenopoulos Road
P.O. Box 1152
Nicosia
Tel: 6282-75628
Cable: HE-I-NAMI

ETHIOPIA
African Salespower & Agency Private Ltd., Co.
P. O. Box 718
58/59 Cunningham St.
Addis Ababa
Tel: 12285
Cable: ASACO Addisababa

HONG KONG
Schmidt & Co. (Hong Kong) Ltd.
P.O. Box 297
1511, Prince's Building 15th Floor
10, Chater Road
Hong Kong
Tel: 240168, 232735
Cable: SCHMIDTCO Hong Kong

INDIA
Blue Star Ltd.
Kasturi Buildings
Jamshedji Tata Rd.
Bombay 20BR, India
Tel: 29 50 21
Telex: 2396
Cable: BLUEFROST

Blue Star Ltd.
Band Box House
Prabhadevi
Bombay 25DD, India
Tel: 45 73 01
Telex: 2396
Cable: BLUESTAR

Blue Star Ltd.
14/40 Civil Lines
Kanpur, India
Tel: 6 88 82
Cable: BLUESTAR

Blue Star, Ltd.
7 Hare Street
P.O. Box 506
Calcutta 1, India
Tel: 23-0131
Telex: 655
Cable: BLUESTAR

Blue Star Ltd.
Blue Star House,
34 Ring Road
Lajpat Nagar
New Delhi 24, India
Tel: 62 32 76
Telex: 463
Cable: BLUESTAR

Blue Star Ltd.
17-C Ulsoor Road
Bangalore-8

Blue Star, Ltd.
96 Park Lane
Secunderabad 3, India
Tel: 7 63 91
Cable: BLUEFROST

Blue Star, Ltd.
23/24 Second Line Beach
Madras 1, India
Tel: 2 39 55
Telex: 379
Cable: BLUESTAR

Blue Star, Ltd.
1B Kaiser Bungalow
Dindli Road
Jamshedpur, India
Tel: 38 04
Cable: BLUESTAR

INDONESIA
Bah Bolon Trading Coy. N.V.
Djalah Merdeka 29
Bandung
Tel: 4915 51560
Cable: ILMU
Telex: 809

IRAN
Telecom, Ltd.
P. O. Box 1812
240 Kh. Saba Shomali
Teheran
Tel: 43850, 48111
Cable: BASCOM Teheran

ISRAEL
Electronics & Engineering Div. of Motorola Israel Ltd.
17 Aminadav Street
Tel-Aviv
Tel: 36941 (3 lines)
Cable: BASTEL Tel-Aviv
Telex: Bastel Tv 033-569

JAPAN
Yokogawa-Hewlett-Packard Ltd.
Ohashi Building
59 Yoyogi 1-chrome
Shibuya-ku, **Tokyo**
Tel: 03-370-2281/7
Telex: 232-2024YHP
Cable: YHPMARKET TOK 23-724

Yokogawa-Hewlett-Packard Ltd.
Nisei Ibaragi Bldg.
2-2-8 Kasuga
Ibaragi-Shi
Osaka
Tel: 23-1641

Yokogawa-Hewlett-Packard Ltd.
Ito Building
No. 59, Kotori-cho
Nakamura-ku, **Nagoya City**
Tel: 551-0215

Yokogawa-Hewlett-Packard Ltd.
Nitto Bldg.
2300 Shinohara-cho,
Kohoku-ku
Yokohama 222
Tel: (405) 432-1504/5

KENYA
R. J. Tilbury Ltd.
P. O. Box 2754
Suite 517/518
Hotel Ambassadeur
Nairobi
Tel: 25670, 68206, 58196
Cable: ARJAYTEE Nairobi

LEBANON
Constantin E. Macridis
Clemenceau Street
P.O. Box 7213
Beirut
Tel: 220846
Cable: ELECTRONUCLEAR Beirut

MALAYSIA
MECOMB Malaysia Ltd.
2 Lorong 13/6A
Section 13
Petaling Jaya, **Selangor**
Cable: MECOMB Kuala Lumpur

MOZAMBIQUE
A. N. Goncalves, LDA.
4.1 Apt. 14 Av. D. Luis
P.O. Box 107
Lourenco Marques
Cable: NEGON

NEW ZEALAND
Hewlett-Packard (N.Z.) Ltd.
32-34 Kent Terrace
P.O. Box 9443
Wellington, N.Z.
Tel: 56-559
Cable: HEWPACK Wellington

Hewlett Packard (N.Z.) Ltd.
Box 51092
Pukuranga
Tel: 573-733

PAKISTAN (EAST)
Mushko & Company, Ltd.
Zirat Chambers
31, Jinnah Avenue
Dacca
Tel: 280058
Cable: NEWDEAL Dacca

PAKISTAN (WEST)
Mushko & Company, Ltd.
Oosman Chambers
Victoria Road
Karachi 3
Tel: 511027, 512927
Cable: COOPERATOR Karachi

PHILIPPINES
Electromex Inc.
Makati Commercial Center
2129 Pasong Tamo
Makati, Rizal D 708
P.O. Box 1028
Manila
Tel: 89-85-01
Cable: ELEMEX Manila

SINGAPORE
Mechanical and Combustion Engineering Company Ltd.
9, Jalan Kilang
Red Hill Industrial Estate
Singapore, 3
Tel: 642361-3
Cable: MECOMB Singapore

SOUTH AFRICA
Hewlett Packard South Africa (Pty.), Ltd.
P.O. Box 31716
Braamfontein Transvaal
Milnerton
30 De Beer Street
Johannesburg
Tel: 725-2080, 725-2030
Telex: 0226 JH
Cable: HEWPACK Johannesburg

Hewlett Packard South Africa (Pty.), Ltd.
Breecastle House
Bree Street
Cape Town
Tel: 3-6019, 3-6545
Cable: HEWPACK Cape Town
Telex: 5-0006

Hewlett Packard South Africa (Pty.), Ltd.
30B Glenwood Centre
Corner Hunt & Moore Roads
P.O. Box 99
Overport, Natal
Tel: 347536

TAIWAN REP. OF CHINA
Hewlett Packard Taiwan
39 Chung Shiao West
Sec. 1
Overseas Insurance
Corp. Bldg. 7th Floor
Taipei
Tel: 579-605, 579-610, 579-613
Telex: c/o Bankamerica TP 339
Cable: HEWPACK Taipei

THAILAND
The International Engineering Co., Ltd.
P. O. Box 39
614 Sukhumvit Road
Bangkok
Tel: 910722 (7 lines)
Cable: GYSOM
TLX INTENCO BK-226 Bangkok

VIETNAM
Peninsular Trading Inc.
P.O. Box H-3
216 Hien-Vuong
Saigon
Tel: 20.805
Cable: PENINSULA Saigon

ZAMBIA
R. J. Tilbury (Zambia) Ltd.
P.O. Box 2792
Lusaka
Zambia, Central Africa

MEDITERRANEAN AND MIDDLE EAST COUNTRIES NOT SHOWN PLEASE CONTACT:
Hewlett-Packard Correspondence Office
Piazza Marconi 25
I-00144 Rome-Eur, Italy
Tel: (6) 59 40 29
Cable: HEWPACKIT Rome
Telex: 61514

OTHER AREAS NOT LISTED, CONTACT:
Hewlett-Packard INTERCONTINENTAL
3200 Hillview Ave.
Palo Alto, California 94304
Tel: (415) 326-7000
(Feb. 71 493-1501)
TWX: 910-373-1267
Cable: HEWPACK Palo Alto
Telex: 034-8461

MANUAL CHANGES

MODEL 310A

WAVE ANALYZER

Manual Part No. 00310-90003

▌New or Revised Item

ERRATA

Page 1-0, Table 1-1. Add the following paragraphs under Options.

908, Rack Mount Kit, part number 5060-8743
910, Additional Operating and Service Manual, part number 00310-90003

Page 1-2. Insert the following options between Paragraph 1-26 and 1-27.

Option 908 Rack Mount Kit.

The Model 310A is initially shipped as a bench instrument. A rack mount kit, Option 908, part number 5060-8743, is available to convert to a rack mounted instrument.

Option 910, Operating and Service Manual.

An additional 310A Operating and Service Manual is available by ordering Option 910, part number 00310-90003.

Page 2-1, Paragraph 2-7. Replace Paragraph 2-7 with the following:

2-7. The Model 310A is delivered as a cabinet mount instrument. A rack mount kit, Option 908, part number 5060-8743, is available to convert to a rack mounted instrument. (Refer to Page 2-1 for rack mounting instructions and list of kit parts.)

Page 5-13, Paragraph 5-44. Change Step d to read "Adjust A9C13 and A9C18 so that the two signals are equal in amplitude and have a phase difference of 90°, with channel A leading (to the left of) channel B. Adjust A11R4 so that signal amplitude is 12.5 V p-p."

Page 5-13, Paragraph 5-45. Change Step a to read "Connect the oscilloscope channel A to A15TP1 (junction of A15CR5 and CR7) and connect channel B to A15TP2 (junction of A15CR1 and CR3)."

Page 5-14, Paragraph 5-48. Change Step h to read "Set MODE to NORMAL and adjust OUTPUT AMPLITUDE fully clockwise. Set RANGE to CAL and adjust CAL front panel screwdriver adjustment for full-scale meter indication."

Page 5-14, Paragraph 5-49, Step b. Change 5-47 to 5-48.

Page 5-15, Paragraph 5-54. Add to Step i "Adjust oscillator frequency until meter reads 25% of full scale.

Page 5-29/5-30, Figure 5-19. On A15 schematic, add TP1 at junction of CR5 and CR7 and add TP2 at junction of CR1 and CR3.

Page 6-6, Replaceable Parts. Change A8Q2 to 1853-0020,Tstr:PNP Si.

CHANGE NO. 1 applies to serial numbers 1507A03725 and greater.

Page 6-19, Table 6-1. Add new capacitor designated as C25, 0150-0096, C—Fxd, .05 μF 100 V.

Page 5-35/5-36, Figure 5-25. Add C25, value .05 to schematic as shown. To add this part in the field, solder C25 to the emitter and base leads of Q1.

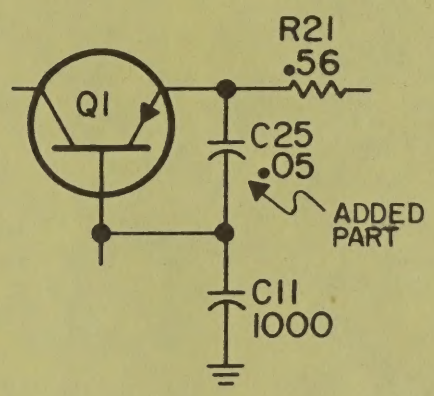

HEWLETT hp PACKARD

00310-90003

Printed in U.S.A.